RC8 B4e

Setup: LCRC B4e

Driver: Vin Manchanda — Team Associated | **Event:** Mugen Challange 2022

Date: May 27, 2023 | **Track:** LCRC

Qualify: | **TQ:** ☐ | **Main:** | **Finish:** 11 | **Best Lap Time:** 40.2

Front Suspension:

Camber: -1 degrees | Droop: 105 mm | Open in So Dialed App

- **Ride Height:** 24 mm
- **Toe:** +1 degrees | **Hex:** +0mm
- **Anti-Roll Bar**
  - **Size:** 2.2mm
  - **Gap:** 3.0 mm
- **Ackerman** (1 2 3)
- **Steering Arm Plate:** +2 degree
- **Drive Shaft:** 93mm CVA
- **Notes:**

- **Caster Shim:** F/R: 0.9/2 mm
- **Insert Type:** None

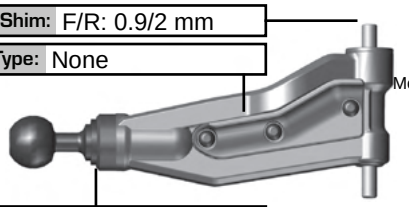

More: sodialed.com/setups

- **Upper Ball Type:**
- **Upper Ball Shim:** .35 mm

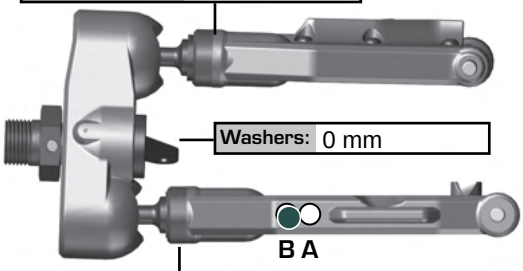

- **Washers:** 0 mm
- **Lower Ball Shim:** 0 mm

- **Wheelbase Shim:** Long (behind arm)
- **Lower Ball Type:**

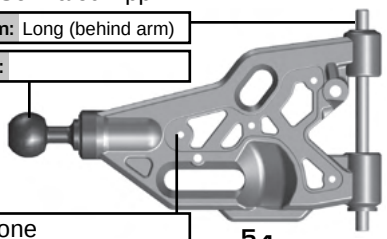

- **Insert Type:** None
- **Insert Location:** Top: ☐ Bottom: ☐

Upper Arm Mount: / **Arm Mount A:** / **Arm Mount B:**

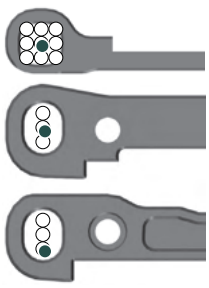

5 4 3 2 1

Tower: Aluminum

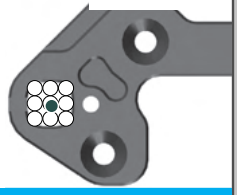

Rear Suspension:

Droop: 125.5 mm

- **Ride Height:** 25 mm
- **Camber:** -1 degrees | **Hex:** +2mm
- **Anti-Roll Bar**
  - **Size:** 2.4mm
  - **Gap:** 1 mm
- **Drive Shaft:** 93mm CVA
- **Chassis Brace:** Insert
  Screws: A - Front, B - Rear
- **Notes:**

- **Hub Shim:** F/R: 0/5 mm
- **Wheelbase Shim:** Short (behind arm)

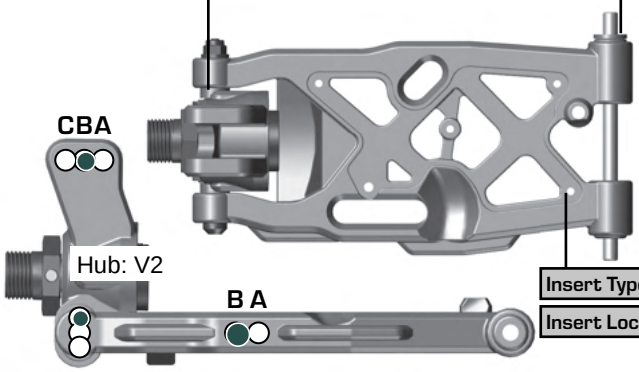

Arm Mount C: C mnt: LRC narrow

Arm Mount D: D mnt: HRC narrow

- **Insert Type:** None
- **Insert Location:** Top: ☐ Bottom: ☐

5 4 3 2 1

- **Wing Height:** High: ☐ Low: ☐

Tower: Aluminum

6 5 4 3 2 1

Electronics:

- **Radio:** Sanwa/Airtronics | **Servo:** Reedy
- **EPA:** Throttle: % Brake: %
- **EXPO:** Throttle: % Brake: %
- **ESC:** Reedy | **Motor:** Reedy
- **Battery:** Reedy — Saddle ☐ Brick ☐
- **Battery Position:** Forward
- **Battery Tray Position:** Rear ☐ Forward ☐
- **Notes:**

Differential:

R: 42/12

	Front	Center	Rear
Fluid:	8,000 cst	5,000 cst	6,000 cst
Gears:	High traction	High traction	High traction
Mass:			

- **Notes:** Remove planetary gear shims #1 and #3 diff cases

Gearing:

- **Spur Gear:** 46 | **Pinion:** 17
- **Notes:**

Shocks:

	Front	Rear
Piston:	3x1.3+ 3x1.4	3x1.4+3x1.5
Fluid:	47.5 wt	42.5 wt
Bladder:	Emulsion	Emulsion
Rebound:	0 %	0 %
Spring:	5.3lb Gray	3.9lb Black
Length:	105 mm	125 mm

Oil brand: Team Associated
Notes: Flat FT 6 hole rear piston



Track Info:

- **Size:** Medium
- **Surface:** Smooth
- **Traction:** Low
- **Moisture:** Wet/Dry
- **Condition:** Outdoor hard-packed
- **Temperature:** Ambient: 27C/80F Track: 27C/80F
- **Notes:**

Tires:

- F tire: JCONCEPTS Relapse Aqua2
- Wheel: JCONCEPTS Bullet wheels
- R tire: JCONCEPTS Relapse Wheel:
- **Notes:**

Radio Tray Flex Assembly:

- **Transponder Mount:** ☐ **None:** ☐
- **Radio Tray Brace:** ☐

Body and Wing:

- **Body:** JConcepts s15
- **Nose Cone:**
- **Rear Wing:** JCONCEPTS Razor
- **Angle:** 0° ☐ 2° ☐ 4° ☐ **Button:** Flat ☐ Fin ☐
- **Vent Holes:**

Weight:

- **Total Weight:**
- **Notes:**

Vehicle Comments:

- **Notes:**