RC10 B74.2 TEAM KIT

Setup: KIM 2025

Driver: Marco Steinbuechel | **Event:** Köngen Indoor Masters 2025
Date: January 7, 2025 | **Track:** KIM 2025 indoor
Qualify: | **TQ:** ☐ | **Main:** | **Finish:** | **Best Lap Time:** 19.1

Front Suspension:

Open in So Dialed App

Ride Height:	14 mm
Camber:	-1 degrees
Toe:	+1 degrees
Anti-Roll Bar:	1.9mm
Arm Type:	Gull wing
Tower Type:	B74.2 Gull wing
Wheelbase Shim:	1 mm
Wheel Hex:	5mm
Caster Block:	8 ° ☐ 9 ° ◉ 10 ° ☐
Chassis Brace Support:	Plastic & fiberglass
Top Plate Brace:	Carbon
Front Axles:	CVA ◉ DCV ☐
Notes:	



Front Chassis Brace Screws:

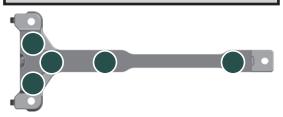

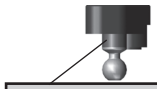

Ball Stud Spacing: 1 mm

Arm Mount A: 1 ° ☐ 0 .5° ☐ Gray ☐ Black ☐



Arm Mount B: 1 ° ☐ 0 .5° ☐ Gray ☐ Black ☐



Diff Height:
+2 ◉
+0 ☐



Axle Height: More: sodialed.com/setups
+3 ☐ +2 ◉ +1 ☐ 0 ☐

Ball Stud Spacing: 0 mm

Steering Plate: +2

Ball Stud Spacing: 2 mm

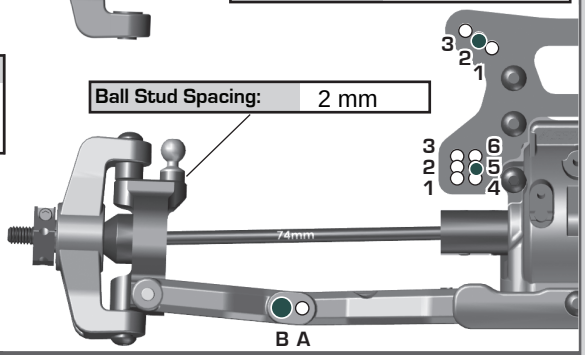

Rear Suspension:

Ride Height:	13 mm
Camber:	-1 degrees
Anti-Roll Bar:	2.0mm
Arm Type:	Carbon
Wheelbase Shim:	Short (arm forward)
Wheel Hex:	8mm Serpent
Chassis Brace Support:	Plastic & fiberglass
Hub Spacing:	Fwd ☐ Mid ◉ Back ☐
Notes:	

Rear Chassis Brace Screws:

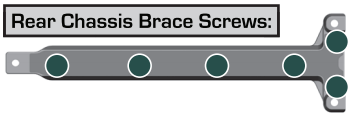

Arm Mount C: 1 ° ◉ 0 .5° ☐ Gray ☐ Black ☐

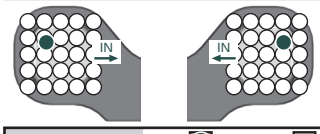

Arm Mount D: 1 ° ◉ 0 .5° ☐ Gray ☐ Black ☐



Diff Height:
+3 ☐
+2 ◉
+1 ☐
+0 ☐

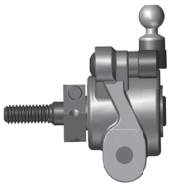

Axle Height:

◉	▼0 3▲	+3
☐	▼1 2▲	+2
☐	▲1 2▼	+1
☐	▲0 3▼	+0

Camber Link Spacing: 2 mm

Ball Stud Spacing: 2 mm

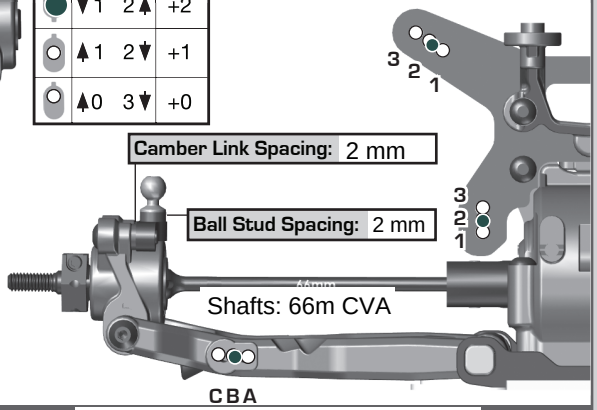

Electronics:

Radio:	
Servo:	AGFRC
EPA:	Throttle: % Brake: %
ESC:	Hobbywing XR10 Pro G2S
	Settings: Blinky
Motor:	Hobbywing 4.5
Timing:	
Pinion:	18
Spur:	78
Battery:	Intellect Pioneering 5000 MC3 5000 mAh
Battery Position:	Back 1 ☐ 2 ☐ 3 ☐ 4 ◉ Forward
Battery Weight:	

Differential:

	Front	Center	Rear
Fluid:		None	
Gears:	Metal	N/A	Metal
Type:	LTC	None	LTC
Notes:		30,000	15,000

Slipper Clutch:

Type:	
# of Pads:	
Setting:	3.2

Shocks:

Oil: Hudy

	Front	Rear
Piston:	2 x 1.6mm	2 x 1.7mm
Thickness:		
Fluid:	700 cst	800 cst
Spring:	4.6lb Purple	2.2lb Blue
Limiters:	1 / 2 mm int/ext	0 / 3 mm int/ext
Stroke:	24 mm	25.5 mm
Eyelet Length:	+2 mm	+0 mm
Cup Offset:	5 mm	0 mm
Notes:		



Track Info:

Size:	Medium/Open
Surface:	Dirt ☐ Carpet ☐ Astroturf ☐ Multi Surface ☐
Traction:	High/High/High
Moisture:	Dry/Dry/Dry
Condition:	Smooth
Temperature:	Ambient: 20C/68F Track: 20C/68F
Notes:	

Tires:

Front Tires:	Shard
Front Compound:	Gelb
Front Insert:	6Mik white
Rear Tires:	Azami
Rear Compound:	Gelb
Rear Insert:	Schum. med Tuby
Wheel (F/R):	F: Ruddog
Notes:	Prep: Sidewall glued to mid of wedges

Body, Wing, Weight:

Body:	JConcepts F2 lightweight
Front Wing:	Yes ☐ No ☐
Rear Wing:	JC Carpet 6.5"
Wing Angle:	0° ◉ 6° ☐
Wing Mount Height:	0 ☐ -2 ◉
Servo Weights:	
Electronic Weights:	R: Ruddog
Total Vehicle Weight:	1738 g

Vehicle Comments: Car moved the front up and down a lot under acceleration and braking. Occasional Diff-out coming out on the straight. Overall good steering, very controllable. Speed on the straight was…