RC8 B4e

Setup: GSRC 2022 eNats

Driver: Vin Manchanda Team Associated **Event:** NorthEast Showdown

Date: May 27, 2023 **Track:** LCRC

Qualify: **TQ:** ☐ **Main:** **Finish:** **Best Lap Time:**

Front Suspension:

Camber: -1 degrees

Ride Height: 24 mm

Toe: +2 degrees Hex: +0mm

Anti-Roll Bar

Size: 2.1mm

Gap: 2.0 mm

Ackerman

1 2 3 TOP

Steering Arm Plate: +2 degree

Drive Shaft: 93mm CVA

Notes:

Droop: 105 mm

Caster Shim: F/R: 2/0.9 mm

Insert Type: None

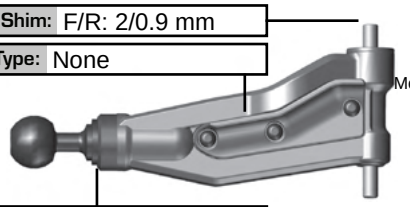

More: sodialed.com/setups

Upper Ball Type:

Upper Ball Shim: 0.35 mm

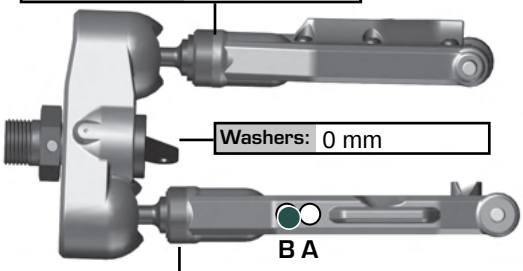

Washers: 0 mm

B A

Lower Ball Shim: 0 mm

Open in So Dialed App

Wheelbase Shim: Long (behind arm)

Lower Ball Type:

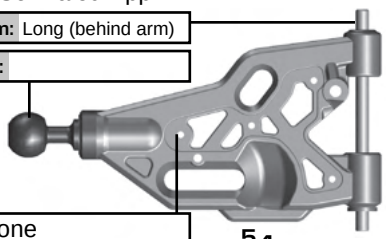

Insert Type: None

Insert Location: Top: ☐ Bottom: ☐

Upper Arm Mount:

Arm Mount A:

Arm Mount B:

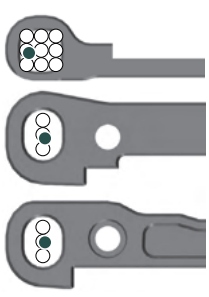

5 4 3 2 1

Tower: Aluminum

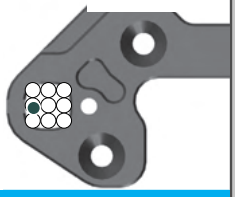

Rear Suspension:

Ride Height: 26 mm

Camber: -1.5 degrees Hex: +0mm

Anti-Roll Bar

Size: 2.4mm

Gap: 5.5 mm

Drive Shaft: 93mm CVA

Chassis Brace:

Insert, Ball

Screws: A - Front

Notes:

Droop: 126 mm

Hub Shim: F/R: 0/5 mm

Wheelbase Shim: 2mm behind arm (shave arms)

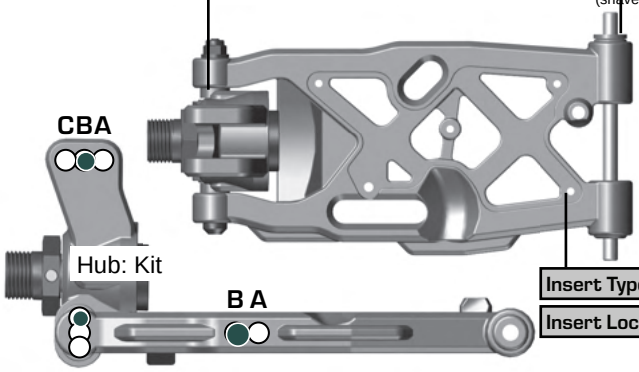

CBA

Hub: Kit

B A

Arm Mount C:

C mnt: LRC narrow

Arm Mount D:

D mnt: HRC narrow

Insert Type: None

Insert Location: Top: ☐ Bottom: ☐

5 4 3 2 1

Wing Height: High: ☐ Low: ☐

Tower: Aluminum



6 5 4 3 2 1

Electronics:

Radio: Sanwa/Airtronics Servo:

EPA: Throttle: % Brake: %

EXPO: Throttle: % Brake: %

ESC: Reedy Motor: Reedy

Battery: Reedy Saddle ☐ Brick ☐

Battery Position: Middle

Battery Tray Position: Rear ☐ Forward ☐

Notes:

Differential:

R: 42/12

	Front	Center	Rear
Fluid:	10,000 cst	7,000 cst	6,000 cst
Gears:	High traction	High traction	High traction
Mass:			

Notes:

Gearing:

Spur Gear: 46 Pinion: 17

Notes:

Shocks:

	Front	Rear
Piston:	3x1.4+2x1.5	3x1.5+2x1.6
Fluid:	47.5 wt	40 wt
Bladder:	Stiff	Stiff
Rebound:	0 %	0 %
Spring:	5.3lb Gray	3.8lb Brown
Length:		

Oil brand: Team Associated



Track Info:

Size: Medium

Surface: Smooth

Traction: Low

Moisture: Wet

Condition: Outdoor hard-packed

Temperature: Ambient: 21C/70F Track: 18C/65F

Notes:

Tires:

F tire: JC Blockers Wheel:

R tire: JC Blockers Wheel:

Notes:

Radio Tray Flex Assembly:

Transponder Mount: ☐ None: ☐

Radio Tray Brace: ☐

Body and Wing:

Body: B4e Gamma

Nose Cone:

Rear Wing: Kit

Angle: 0° ☐ 2° ☐ 4° ☐ Button: Flat ☐ Fin ☐

Vent Holes:

Weight:

Total Weight:

Notes:

Vehicle Comments:

Notes: