RC10 B74.2 TEAM KIT

Setup: 74.2 Base Trains n Lanes

Driver: Vin Manchanda — Team Associated | **Event:** Carpet
Date: March 19, 2024 | **Track:** Trains n Lanes
Qualify: | **TQ:** ☐ | **Main:** | **Finish:** 2 | **Best Lap Time:** 16.2

Front Suspension:

Ride Height:	13 mm
Camber:	-1 degrees
Toe:	+1 degrees
Anti-Roll Bar:	1.4mm
Arm Type:	Gull wing
Tower Type:	B74.2 Gull wing
Wheelbase Shim:	1 mm
Wheel Hex:	5mm
Caster Block:	8 ° ◉ 9 ° ☐ 10 ° ☐
Chassis Brace Support:	Carbon
Top Plate Brace:	None
Front Axles:	CVA ☐ DCV ◉
Notes:	



Front Chassis Brace Screws:

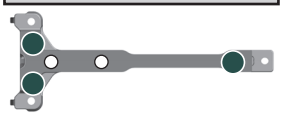

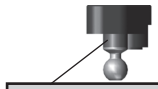

Ball Stud Spacing: 1 mm

Arm Mount A: 1 ° ☐ 0 .5° ☐ Gray ☐ Black ☐



Arm Mount B: 1 ° ☐ 0 .5° ☐ Gray ☐ Black ☐



Diff Height:
+2 ◉
+0 ☐

Open in So Dialed App



Axle Height: More: sodialed.com/setups
+3 ◉ +2 ☐ +1 ☐ 0 ☐

Ball Stud Spacing: 0 mm

Steering Plate: Kit

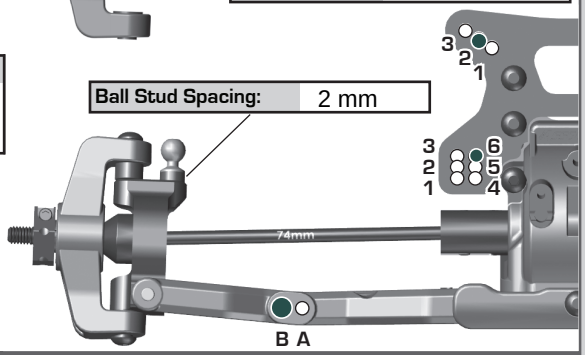

Ball Stud Spacing: 2 mm

Rear Suspension:

Ride Height:	13 mm
Camber:	-1 degrees
Anti-Roll Bar:	1.7mm
Arm Type:	Kit
Wheelbase Shim:	Long (arm back)
Wheel Hex:	6mm
Chassis Brace Support:	Carbon
Hub Spacing:	Fwd ☐ Mid ◉ Back ☐
Notes:	

Rear Chassis Brace Screws:

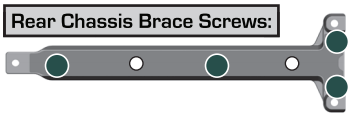

Arm Mount C: 1 ° ◉ 0 .5° ☐ Gray ☐ Black ☐

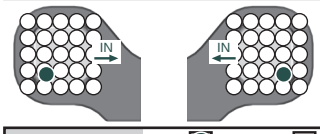

Arm Mount D: 1 ° ◉ 0 .5° ☐ Gray ☐ Black ☐



Diff Height:
+3 ☐
+2 ◉
+1 ☐
+0 ☐

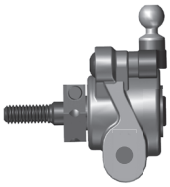

Axle Height:

◉	▼0 3▲	+3
☐	▼1 2▲	+2
☐	▲1 2▼	+1
☐	▲0 3▼	+0

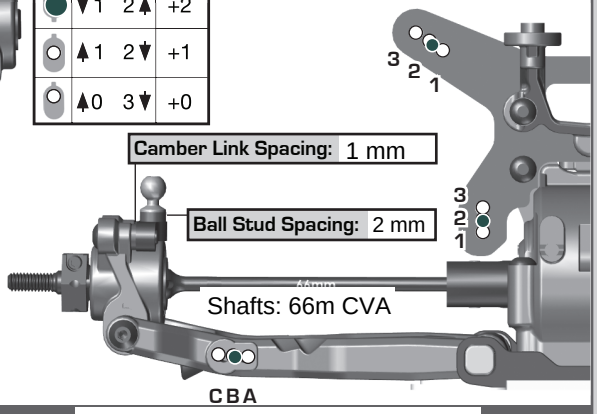

Camber Link Spacing: 1 mm

Ball Stud Spacing: 2 mm

Electronics:

Radio:		Servo:	Reedy
EPA:	Throttle: %	Brake:	%
ESC:	Reedy		
ESC Settings:			
Motor:	Reedy SP5 13.5	Timing:	
Pinion:	23	Spur:	78
Battery:	Reedy 4800 LCG shorty		4800 mAh

Battery Position:
Back 1 ☐ 2 ☐ 3 ☐ 4 ◉ Forward

Battery Weight:

Differential:

	Front	Center	Rear
Fluid:		1,000,000	
Gears:	Plastic	Plastic	Plastic
Type:	LTC	LTC	LTC

Notes: 10,000 30,000

Slipper Clutch:

Type:	
# of Pads:	
Setting:	

Shocks:

Oil: Team Associated

	Front	Rear
Piston:	2 x 1.6mm	2 x 1.7mm
Thickness:		
Fluid:	45 wt	35 wt
Spring:	4.0lb Red	2.0lb Gray
Limiters:	1/3mm mm int/ext	0/2 mm int/ext
Stroke:	22 mm	28 mm
Eyelet Length:	+2 mm	+0 mm
Cup Offset:	5 mm	0 mm
Notes:		



Track Info:

Size:	Tight
Surface:	Indoor carpet
Traction:	High
Moisture:	Dry
Condition:	Smooth
Temperature:	Ambient: 18C/65F Track: 18C/65F
Notes:	

Tires:

Front Tires:	Jconcepts Swagger
Front Compound:	Pink
Front Insert:	JC
Rear Tires:	JConcepts Nessi
Rear Compound:	Pink
Rear Insert:	JC
Wheel (F/R):	F: JC
Notes:	

Body, Wing, Weight:

Body:	Lightweight
Front Wing:	Yes ☐ No ☐
Rear Wing:	Kit
Wing Angle:	0° ☐ 6° ◉
Wing Mount Height:	0 ☐ -2 ◉
Servo Weights:	
Electronic Weights:	R: JC
Total Vehicle Weight:	

Vehicle Comments: