RC8 T4e TEAM KIT

Driver: Vin Manchanda Team Associated | Event:
Date: May 12, 2024 | Track: MotoFarm
Qualify: | TQ: ☐ Main | Finish: 1 | Best Lap Time:

RESET

Front Suspension:

Ride Height: 32 mm
Toe: | Hex: +2mm
Anti-Roll Bar
Size: 2.2mm
Gap: 2.0 mm
Ackerman
Steering Arm Plate: +2 degree
Drive Shaft: CVAs: ☐ Universals: ☐
Notes:

Caster Shim: F/R: 3 / 1 mm
Insert Type: Standard

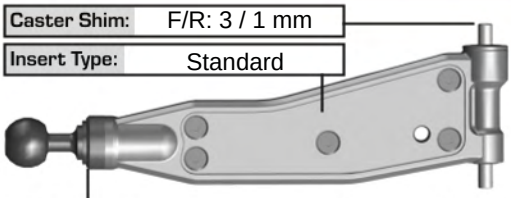

Upper Ball Type:
Upper Ball Shim: 1.4 mm

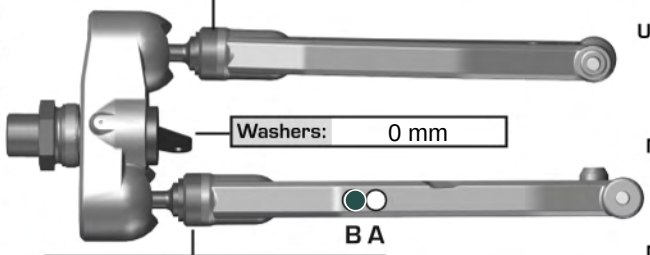

Washers: 0 mm
Lower Ball Shim: 0.35 mm

Wheelbase Shim: Long (behind arm)
Lower Ball Type:

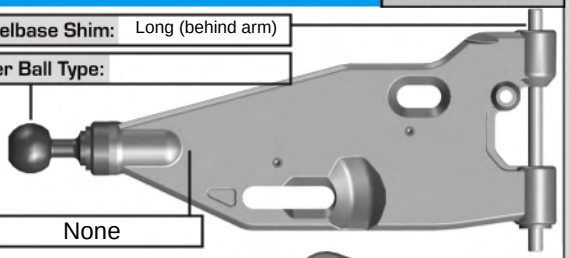

Insert Type: None

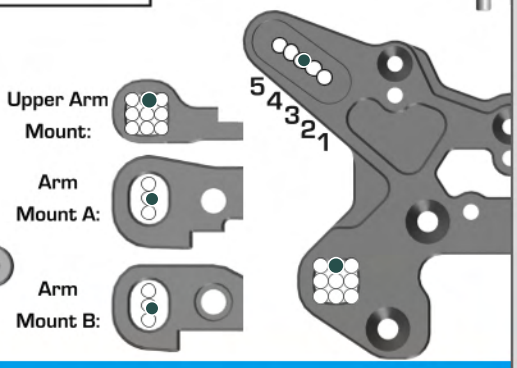

Rear Suspension:

Ride Height: 32 mm
Camber: | Hex: +2mm
Anti-Roll Bar
Size: 2.4mm
Gap: 5.5 mm
Drive Shaft: CVAs: ☐ Universals: ☐
Chassis Brace
Pivot Type:
Insert Type: Insert
Notes:

Hub Shim: F/R: 2.5 / 2.5 mm

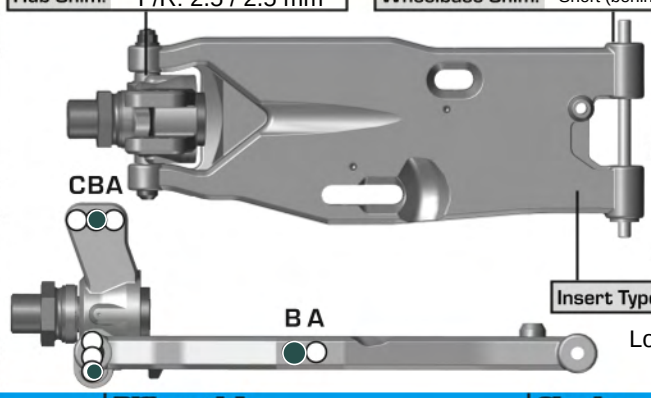

Wheelbase Shim: Short (behind arm)

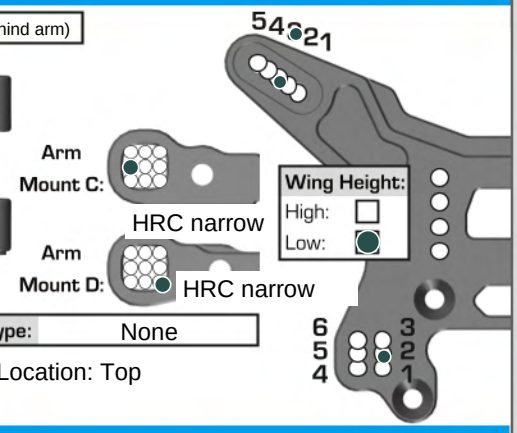

Insert Type: None
Location: Top

Electronics:

Radio: | Servo:
EPA: Throttle: % Brake: %
EXPO: Throttle: % Brake: %
ESC: | Motor: Reedy
Battery: Saddle ☑ Brick ☐
Battery Position: Rear ☑ Center ☐ Forward ☐
Battery Tray Position: Rear ☐ Forward ☑
Notes:

Differential:

	Front	Center	Rear
Fluid:	12,000	15,000	7,000
Gears:	High traction	High traction	High traction
Mass:			
Notes:			

Gearing:

Spur Gear: 46 | Pinion: 16
Notes:

Shocks:

	Front	Rear
Piston:	8x1.2mm tapered	8x1.2mm tapered
Fluid:	45 wt	40 wt
Bladder:	Stiff	Stiff
Rebound:		
Spring:	5.7lb Yellow	4.7lb Red
Length:	105 mm	127 mm
Eyelet:	+2 mm	+4
Notes:		



Track Info:

Size: Tight
Surface: Outdoor loose/loamy
Traction: Low/Medium
Moisture: Dusty
Condition: Bumpy
Temperature: Ambient: 10C/50F Track: 7C/45F
Notes:

Tires:

Front Tire/Compound/Insert/Wheel:
JCONCEPTS Reflex
Rear Tire/Compound/Insert/Wheel:
Notes:

Open in So Dialed App More: sodialed.com/setups

Body and Wing:

Body: JCONCEPTS Bruggy
Rear Wing: Kit
Angle: 0° ☐ 2° ☑ 4° ☐ Button: Flat ☐ Fin ☐
Vent Holes:

Weight:

Total Weight:
Notes:

Vehicle Comments:

Notes: