RC8 B4e

Setup: Dirtrunners NJ

**Driver:** Vin Manchanda — Team Associated | **Event:** Season Opener | **Date:** May 27, 2023 | **Track:** Dirtrunners NJ | **Qualify:** | **TQ:** ☐ | **Main:** | **Finish:** 1 | **Best Lap Time:**

## Front Suspension:

Camber: -1.5 degrees | Droop: 106 mm | Open in So Dialed App

- **Ride Height:** 25 mm
- **Toe:** +1 degrees | **Hex:** +0mm
- **Anti-Roll Bar**
  - **Size:** 2.1mm
  - **Gap:** 2.0 mm
- **Ackerman** — 1 2 3
- **Steering Arm Plate:** +2 degree
- **Drive Shaft:** Universal
- Notes: Remove Blue Arm caps for narrow front end

- **Caster Shim:** F/R: 1F mm
- **Insert Type:** None
- **Upper Ball Type:**
- **Upper Ball Shim:** 0.35 mm
- **Washers:** 0 mm
- **Lower Ball Shim:** 0 mm

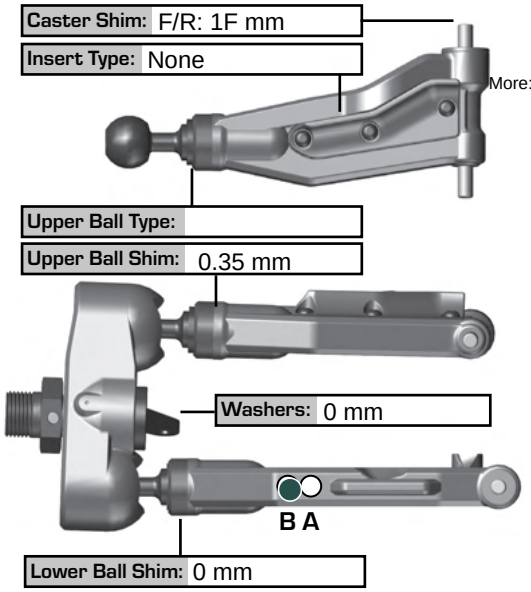


- **Wheelbase Shim:** Long (behind arm)
- **Lower Ball Type:**
- **Insert Type:** None
- **Insert Location:** Top: ☐ Bottom: ☐

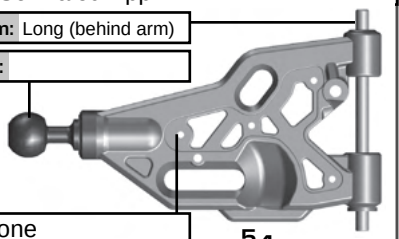

Upper Arm Mount: | Arm Mount A: | Arm Mount B:

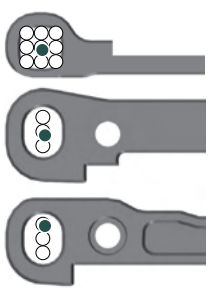

5 4 3 2 1

Tower: Aluminum

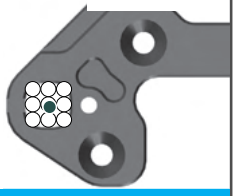

## Rear Suspension:

Droop: 126 mm

- **Ride Height:** 26 mm
- **Camber:** -1 degrees | **Hex:** +2mm
- **Anti-Roll Bar**
  - **Size:** 2.5mm White
  - **Gap:** 0 mm
- **Drive Shaft:** Universal
- **Chassis Brace:** Ball
  Screws: B - Rear
- **Notes:**

- **Hub Shim:** F/R: 0/5 mm
- **Wheelbase Shim:** Short (behind arm)

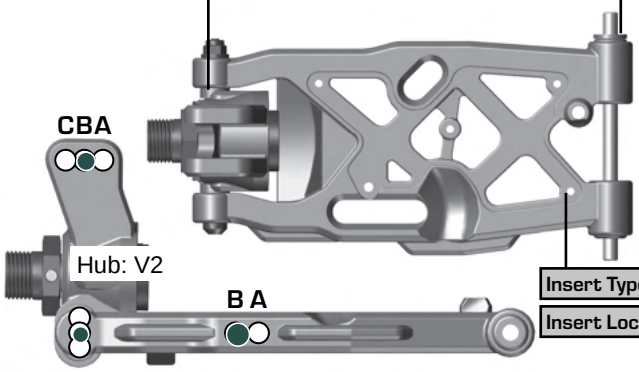


Arm Mount C: C mnt: HRC narrow

Arm Mount D: D mnt: HRC narrow

- **Insert Type:** None
- **Insert Location:** Top: ☐ Bottom: ☐

5 4 3 2 1

- **Wing Height:** High: ☐ Low: ☐

Tower: Aluminum

6 5 4 3 2 1

## Electronics:

- **Radio:** Sanwa/Airtronics | **Servo:**
- **EPA:** Throttle: % Brake: %
- **EXPO:** Throttle: % Brake: %
- **ESC:** Reedy | **Motor:** Reedy
- **Battery:** Reedy — Saddle ☐ Brick ☐
- **Battery Position:** Fwd
- **Battery Tray Position:** Rear ☐ Forward ☐
- **Notes:**

## Differential:

R: 42/12

| | Front | Center | Rear |
|---|---|---|---|
| Fluid: | 5,000 cst | 7,000 cst | 7,000 cst |
| Gears: | High traction | High traction | High traction |
| Mass: | | | |

Notes: Remove blue shims behind planetary gears for HTC only Flipped my diffs…

## Gearing:

- **Spur Gear:** 46 | **Pinion:** 16
- **Notes:**

## Shocks:

| | Front | Rear |
|---|---|---|
| Piston: | 3x1.4+2x1.5 | 3x1.5+2x1.6 |
| Fluid: | 47.5 wt | 40 wt |
| Bladder: | Bleeder | Bleeder |
| Rebound: | 0 % | 0 % |
| Spring: | 5.3lb Gray | 3.9lb Black |
| Length: | | |

Oil brand: Team Associated
Notes: Schelle bump stops and pistons




## Track Info:

- **Size:** Tight
- **Surface:** Medium/Rutted
- **Traction:** Medium/Low
- **Moisture:** Dusty
- **Condition:** Outdoor loose/loamy
- **Temperature:** Ambient: 24C/75F Track: 21C/70F
- **Notes:**

## Tires:

- F tire: JCONCEPTS Reflex Blue
  Wheel: JCONCEPTS Bullet
- R tire: JCONCEPTS Reflex Blue - soft
  Wheel: JCONCEPTS Bullet
- **Notes:**

## Radio Tray Flex Assembly:

- **Transponder Mount:** ☐ **None:** ☐
- **Radio Tray Brace:** ☐

## Body and Wing:

- **Body:** JCONCEPTS S15 wide
- **Nose Cone:**
- **Rear Wing:** JCONCEPTS Razor
- **Angle:** 0° ☐ 2° ☐ 4° ☐ **Button:** Flat ☐ Fin ☐
- **Vent Holes:** Holes

## Weight:

- **Total Weight:**
- **Notes:**

## Vehicle Comments:

- **Notes:**