RC10 B74.2 TEAM KIT

Setup: My Base Setup

Driver: ej nickles **Event:**
Date: April 22, 2026 **Track:** Trains n lanes
Qualify: **TQ:** ☐ **Main:** **Finish:** **Best Lap Time:**

Front Suspension:

Open in So Dialed App

Ride Height:	11 mm
Camber:	-1 degrees
Toe:	+1 degrees
Anti-Roll Bar:	2.0mm
Arm Type:	Gull wing
Tower Type:	B74.2 Gull wing
Wheelbase Shim:	1 mm
Wheel Hex:	4mm
Caster Block:	8 ° ◉ 9 ° ☐ 10 ° ☐
Chassis Brace Support:	Plastic & carbon
Top Plate Brace:	Carbon
Front Axles:	CVA ☐ DCV ◉
Notes:	



Front Chassis Brace Screws:

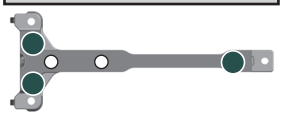

Ball Stud Spacing: 3 mm

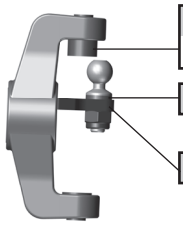

Axle Height: More: sodialed.com/setups
+3 ☐ +2 ◉ +1 ☐ 0 ☐

Ball Stud Spacing: 0 mm

Steering Plate: Kit

Arm Mount A: 1 ° ☐ 0 .5° ☐
Gray ☐ Black ☐



Arm Mount B: 1 ° ☐ 0 .5° ☐
Gray ☐ Black ☐



Diff Height:
+2 ◉
+0 ☐

Ball Stud Spacing: 2 mm

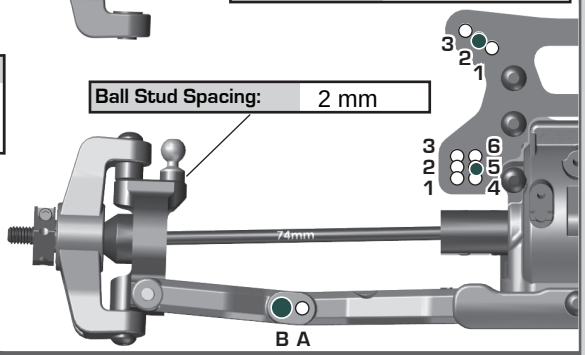

Rear Suspension:

Ride Height:	11 mm
Camber:	-1.5 degrees
Anti-Roll Bar:	1.9mm
Arm Type:	Kit
Wheelbase Shim:	Long (arm back)
Wheel Hex:	5mm
Chassis Brace Support:	Plastic and carbon
Hub Spacing:	Fwd ☐ Mid ☐ Back ◉
Notes:	

Rear Chassis Brace Screws:

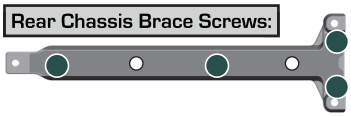

Arm Mount C: 1 ° ◉ 0 .5° ☐
Gray ☐ Black ☐

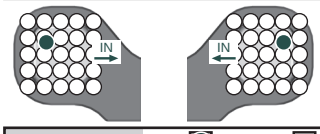

Arm Mount D: 1 ° ◉ 0 .5° ☐
Gray ☐ Black ☐



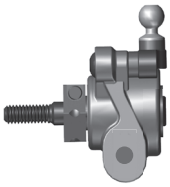

Axle Height:

◉	▼0 3▲	+3
○	▼1 2▲	+2
○	▲1 2▼	+1
○	▲0 3▼	+0

Diff Height:
+3 ☐
+2 ◉
+1 ☐
+0 ☐

Camber Link Spacing: 2 mm

Ball Stud Spacing: 2 mm

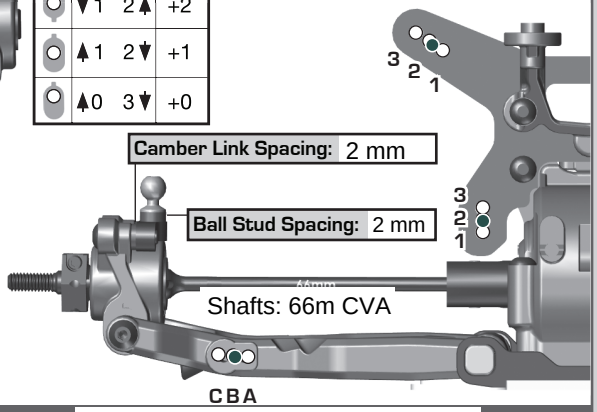

Electronics:

Radio:	Servo: Spektrum
EPA:	Throttle: % Brake: %
ESC:	Hobbywing Xr10pro
ESC Settings:	
Motor:	Trinity Slot machine 13.5 Timing: 0
Pinion:	26 Spur: 78
Battery:	ProTek 4800 mAh
Battery Position:	Back 1 ☐ 2 ☐ 3 ☐ 4 ◉ Forward
Battery Weight:	

Differential:

	Front	Center	Rear
Fluid:		Slipper	
Gears:	Molded	N/A	Molded
Type:	LTC	None	LTC
Notes:		30,000	60,000

Slipper Clutch:

Type:	
# of Pads:	
Setting:	

Shocks:

Oil: Team Associated

	Front	Rear
Piston:	2 x 1.6mm	2 x 1.7mm
Thickness:		
Fluid:	35 wt	35 wt
Spring:	4.3lb Orange	2.4lb Red
Limiters:	1/2 mm int/ext	0 / 0 mm int/ext
Stroke:	22 mm	27.5 mm
Eyelet Length:	+2 mm	+0 mm
Cup Offset:	9 mm	0 mm



Spring retainers Front - 7.90mm Rear - 1.90mm

Track Info:

Size:	Medium
Surface:	Indoor carpet
Traction:	Medium
Moisture:	Dry ☐ Damp ☐ Wet ☐
Condition:	Indoor ☐ Outdoor ☐ Dusty ☐ Hard Packed ☐ Bumpy ☐ Grooved ☐ Smooth ☐ Loamy ☐
Temperature:	Ambient: 18C/65F Track:
Notes:	

Tires:

Front Tires:	JConcepts / pin swag
Front Compound:	Pink
Front Insert:	
Rear Tires:	JConcepts siren
Rear Compound:	Pink
Rear Insert:	
Wheel (F/R):	
Notes:	

Body, Wing, Weight:

Body:	Lightweight
Front Wing:	Yes ☐ No ☐
Rear Wing:	Kit
Wing Angle:	0° ☐ 6° ◉
Wing Mount Height:	0 ◉ -2 ☐
Servo Weights:	
Electronic Weights:	
Total Vehicle Weight:	1564 g

Vehicle Comments:

:: For more setups, visit RC10.com and click on "Setup Sheets"