RC8 T4e TEAM KIT

Driver: Aydan Manchanda | Team Associated | Event: North East Showdown
Date: September 24, 2024 | Track: LCRC Raceway
Qualify: | TQ: ☐ | Main | Finish: 6 | Best Lap Time:

RESET

Front Suspension:

Ride Height: 34 mm
Toe: | Hex: +2mm
Anti-Roll Bar
Size: 2.2mm
Gap: 2.0mm
Ackerman
Steering Arm Plate: 0
Drive Shaft: Universals | Universals: ☐
Camber: -1.5 degrees

Caster Shim: F/R: 1/3 mm
Insert Type: Standard
Upper Ball Type:
Upper Ball Shim: 0 mm

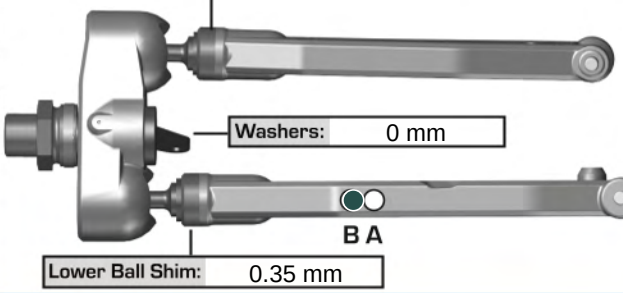

Wheelbase Shim: Long (behind arm)
Lower Ball Type:
Insert Type: None
Location: Bottom

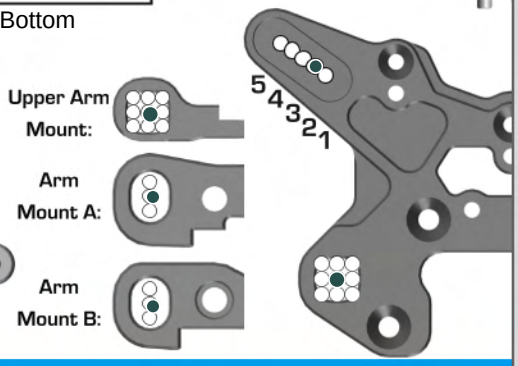

Rear Suspension:

Ride Height: 35 mm
Camber: | Hex: +2mm
Anti-Roll Bar
Size: 2.4mm
Gap: 1 mm
Drive Shaft: CVAs: ● Universals: ☐
Chassis Brace
Pivot Type:
Insert Type: Insert
Notes:

Hub Shim: F/R: 2.5 / 2.5 mm
Wheelbase Shim: Long (front of arm)

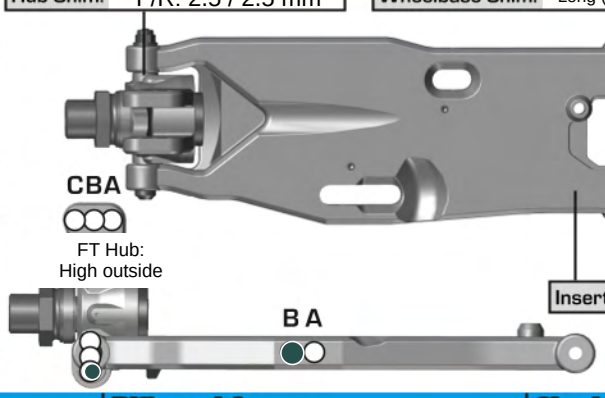

Insert Type: HD
Location: Bottom

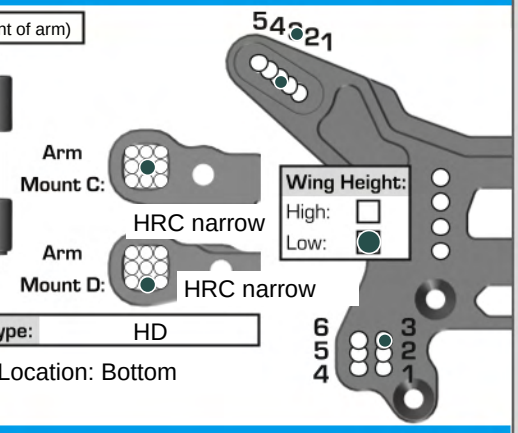

Electronics:

Radio: Sanwa/Airtronics | Servo: Reedy
EPA: Throttle: % | Brake: %
EXPO: Throttle: % | Brake: %
ESC: Reedy | Motor: Reedy
Battery: Saddle ● Brick ☐
Battery Position: Rear ☐ Center ☐ Forward ●
Battery Tray Position: Rear ● Forward ☐
Notes:

Differential:

	Front	Center	Rear
Fluid:	12,000	10,000	7,000
Gears:	High traction	High traction	High traction
Mass:			
Notes:			

Gearing:

Spur Gear: 46 | Pinion: 14
Notes:

Shocks:

	Front	Rear
Piston:	FT #81210 8x1.2 taper drilled	FT 8x1.2 taper drilled
Fluid:	45 wt	40 wt
Bladder:	Stiff	Stiff
Rebound:	0 %	0 %
Spring:	5.7lb Yellow	4.7lb Red
Length:	107 mm	127 mm
Eyelet:	+0 mm	+0
Notes:		



Track Info:

Size: Medium/Open
Surface: Outdoor blue groove
Traction: High/Medium
Moisture: Dry
Condition: Smooth
Temperature: Ambient: 27C/80F | Track: 18C/65F
Notes:

Tires:

Front Tire/Compound/Insert/Wheel:
JConcepts Relapse
Rear Tire/Compound/Insert/Wheel:
JC Relapse
Notes:
Open in So Dialed App | More: sodialed.com/setups

Body and Wing:

Body: JCONCEPTS
Rear Wing: JC Razor
Angle: 0° ● 2° ☐ 4° ☐ Button: Flat ☐ Fin ☐
Vent Holes:

Weight:

Total Weight:
Notes:

Vehicle Comments:

Notes: