RC10 B6.3

Setup: My Base Setup 21.5

Driver: Chance Brasier — Extreme RC Northwest
Event: Butterball Brawl
Date: November 27, 2023
Track: DieHard RC
Qualify: ____ **TQ:** ☐ **Main:** ____ **Finish:** 3 **Best Lap Time:** 18.138 **Avg:** 18.820

Front Suspension:

Open in So Dialed App

Ride Height:	14 mm
Camber:	-2 degrees
Toe:	+2 degrees
Anti-Roll Bar:	1.0mm Blue
Arm Type:	Gull-wing
Tower Type:	B6.3 Gull-wing
Wheel Hex:	5mm Aluminum
Steering Block:	4 mm
Caster	32.5 deg - Kick-up: 30 / Block insert: +2.5
Bulkhead Type:	Steel 25/30 degree
Kick-Up Angle:	
Notes:	

Bump Steer Spacing: 0 mm

Steering Plate: +1mm

Steering Stop Spacing: 0 mm

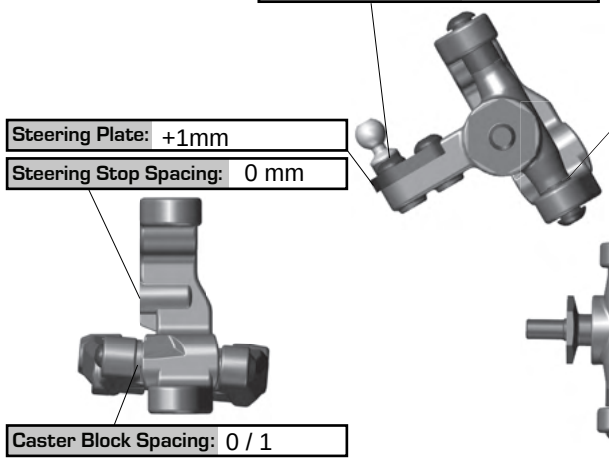

Caster Block Spacing: 0 / 1

Ball Stud Spacing: 0 mm

Axle Height: (More: sodialed.com/setups)

+3	☐
+2	☐
+1	●
0	☐

Ball Stud Spacing: 1 mm

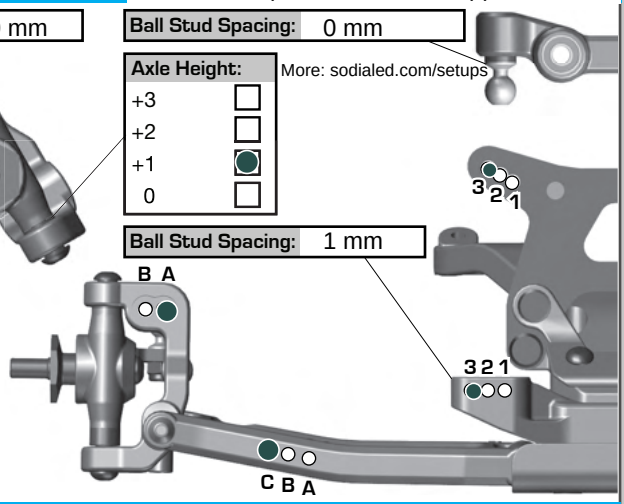

Rear Suspension:

Ride Height:	14 mm
Camber:	-2 degrees
Anti-Roll Bar:	1.3mm Gray
Arm Type:	73mm
Tower Type:	Wide
Arm Spacing:	Short (forward)
Wheel Hex:	5mm
Shock Mounting Position:	Front of Arm ● Rear of Arm ☐
Hub Spacing:	Fwd ☐ Mid ☐ Back ●
CVA Bone Length:	69mm
CVA Axle Type:	
Notes:	

C Mount: Wide aluminum

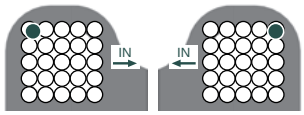

D Mount: Wide aluminum

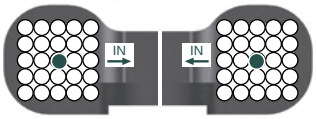

Axle Height:

▼0	3▲	+3
▼1	2▲	+2
▲1	2▼	+1
▲0	3▼	+0

Camber Link Spacing: 2 mm

Ball Stud Spacing: 2 mm

Ball Stud Spacing: 4 mm

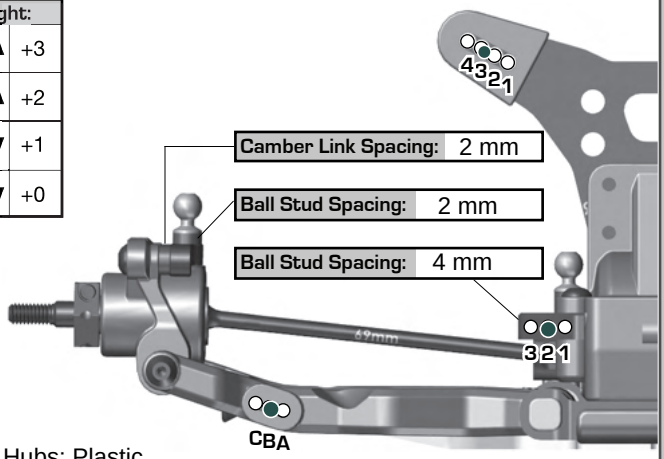

Hubs: Plastic

Electronics:

Radio:	Sanwa/Airtronics	Servo:	ProTek
EPA:	Throttle: 100 %	Brake:	%
ESC:	Hobbywing	Xr10	
ESC Settings:	Settings: Race mode (blinky)		
Motor:	Trinity	Slot machine	
Wind:	21.5	Timing:	51 deg
Pinion:		Spur:	72
Battery:	Reedy	Zappers	4800
Battery Position:	Front hole / 5		
Battery Weight:			

Drivetrain:

Transmission: Laydown

Differential: Ball Diff: ☐ Gear Diff: ●
Height: 3 mm
Gear Diff Mass: 30,000 cst

Two gear diff

Slipper Clutch:

Type:	Slipper; HD B6.3
# of Pads:	2 x 11mm ID Octalock LCF
Setting:	

Shocks:

Oil: Factory Team

	Front	Rear
Piston:	2mm 2x1.6mm FT v2	2mm 2x1.7mm FT v2
Fluid:	37.5 wt	32.5 wt
Spring:	4.60lb Red	2.20lb Blue
Limiters:	int/ext: 0 / 0 mm	int/ext: 1 / 0 mm
Stroke:	22 mm	27.5 mm
Eyelet Length:	+2mm Long	+4mm Longer
Cup Offset:	5 mm	0 mm
Notes:		

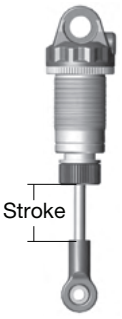

Track Info:

Size:	Medium
Surface:	Indoor carpet
Traction:	High
Moisture:	Dry
Condition:	Smooth
Temperature:	Ambient: 13C/55F Track:
Notes:	

Tires:

Front Tires:	Jconcept fuzzbite wide
Front Compound:	Pink
Front Insert:	
Rear Tires:	Jconcept Sirens
Rear Compound:	Pink
Rear Insert:	
Wheel (F/R):	F: Jconcept

Wide tires mounted on slim wheels

Body, Weight:

Body:	Kit
Front Wing:	Kit
Rear Wing:	Kit
Wing Angle:	6 degrees
Chassis Length:	B6.3 +3mm
Servo Weights:	
Electronic Weights:	R: Jconcept
Total Vehicle Weight:	

Vehicle Comments: Great weekend! Lots of great people and racing! After qualifying 7th into the A main and having triple A-mains I was able to find my groove and ended the weekend on the podium with a…