XPRESS EXECUTE MF1

Setup: Forest Raceway v2

Open in So Dialed App

More: sodialed.com/setups

Driver Chris Milner SpeedRC.co.uk **Track Surface** Indoor carpet Smooth **Track Temperature**

Date October 12, 2023 **Track Traction** Medium/High **Result** **Air Temperature**

Track Forest Raceway Event: Club night **Best Lap** **Humidity** Dry Layout: Tight

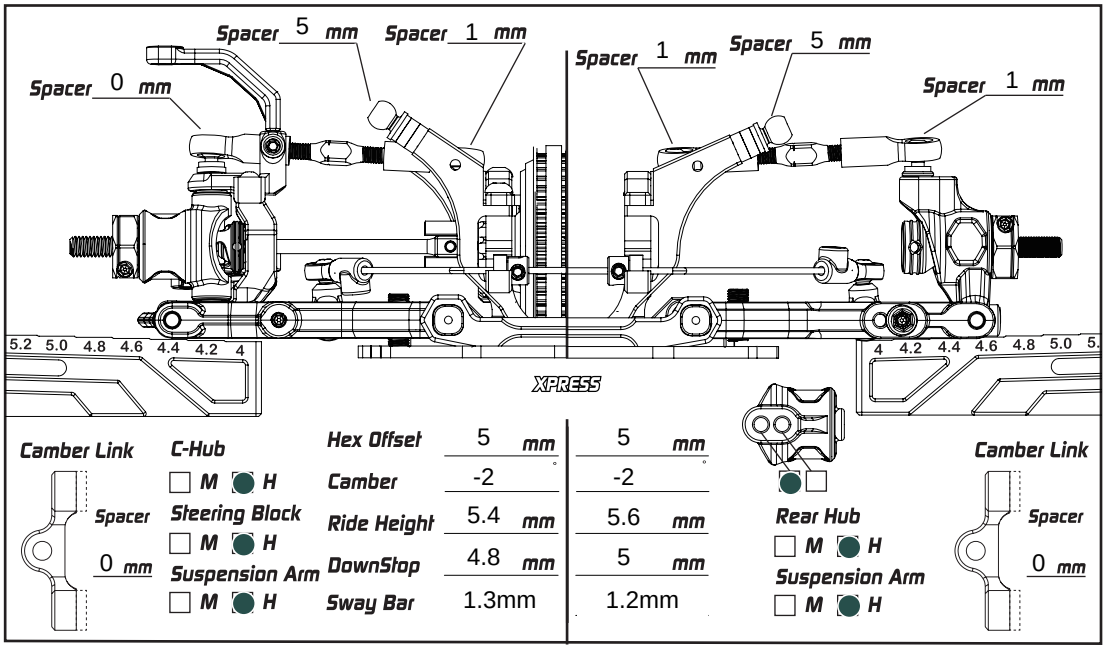

Camber Link		
C-Hub	M ● H	
Hex Offset	5 mm	5 mm
Camber	-2 °	-2 °
Ride Height	5.4 mm	5.6 mm
DownStop	4.8 mm	5 mm
Sway Bar	1.3mm	1.2mm
Rear Hub		M ● H
Suspension Arm		M ● H
Camber Link		
Spacer		0 mm
Steering Block	M ● H	
Suspension Arm	M ● H	

Optional — On-Power Control System

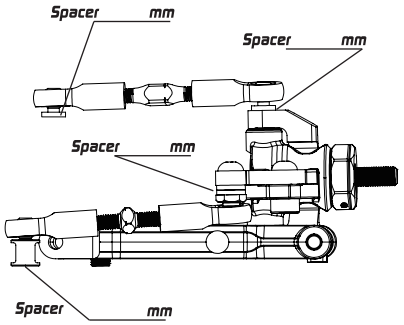

Hex Offset mm
Camber °
Ride Height mm
DownStop mm
Sway Bar mm
Steering Block M H
Suspension Arm M H

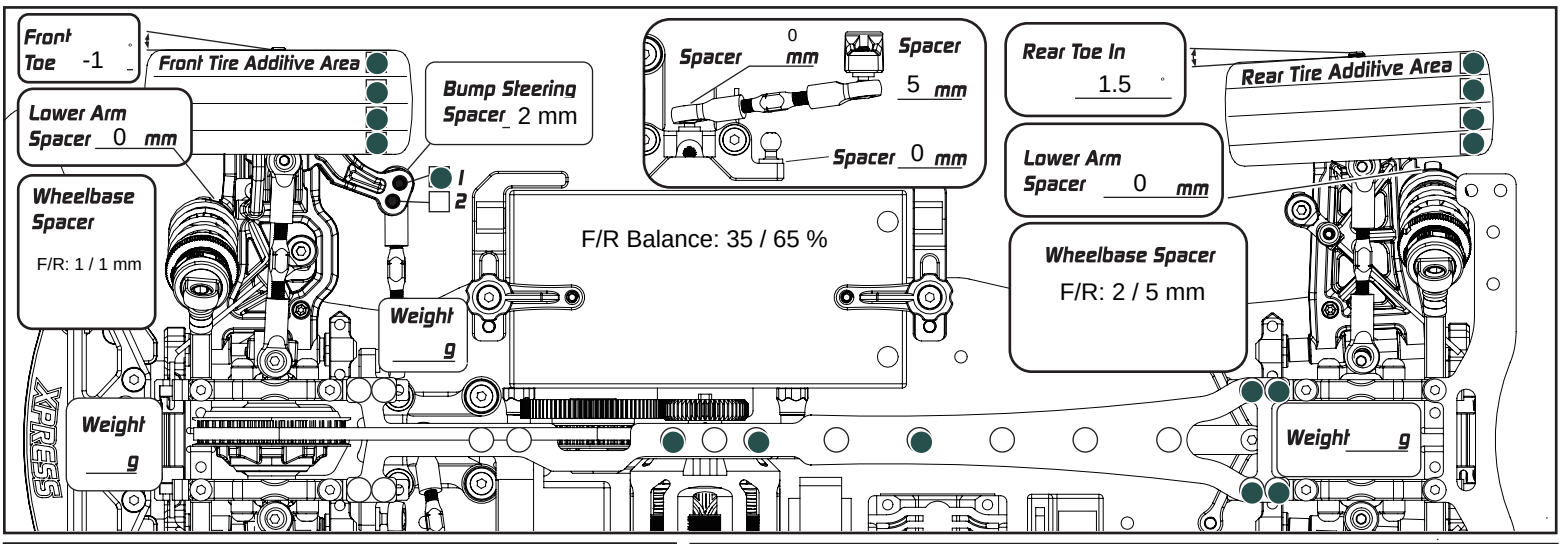

Suspension Mount Setup

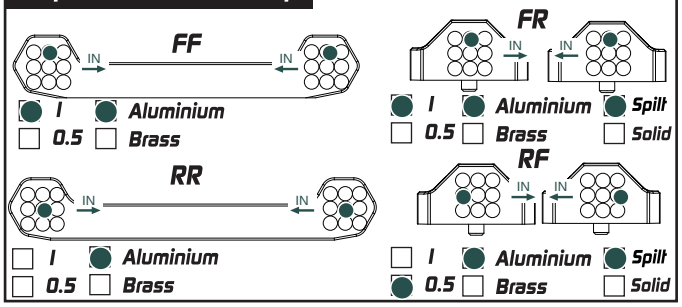

	FF	FR	RR	RF
1	●	●	☐	☐
0.5	☐	☐	☐	●
Aluminium	●	●	●	●
Brass	☐	☐	☐	☐
Spilt		●		●
Solid		☐		☐

Flex Control

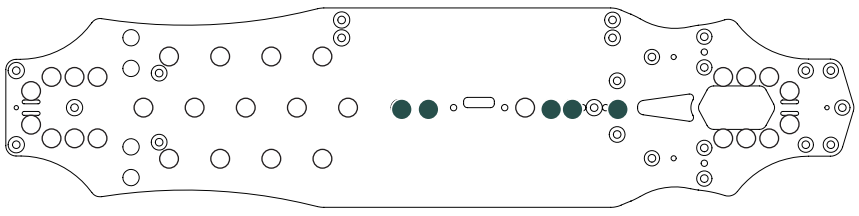

● Graphite Chassis ☐ Aluminum Chassis

Damper Setup

	Front	Rear
Spring	CORE Red 2.1	CORE Green 2.3
Oil	400 cst	400 cst
Rebound		
Piston	4-hole	4-hole
Length	10.5 mm	10.5 mm
Foam Insert	☐	☐
Hole In Cap	☐	☐

Transmission Setup

Front

Oil 100,000 cst

Weight 1.5 g

Position

Others

Servo Tires F: Ride R: Ride

Esc Additive Spider Blue

Motor Body

Spur 64 P/ 81 T Rear Wing

Pinon P/ 45 T FDR 3.42