RC10 B6.3

Setup: PP_SilverstoneTuesClub_21/11/23

Driver: | Event: Club race

Date: November 23, 2023 | Track: Silverstone

Qualify: | TQ: ☐ | Main: | Finish: | Best Lap Time:

Front Suspension:

Open in So Dialed App

Ride Height:	14 mm
Camber:	-1 degrees
Toe:	-1 degrees
Anti-Roll Bar:	None
Arm Type:	Gull-wing
Tower Type:	B6.3 Gull-wing
Wheel Hex:	5mm Aluminum
Steering Block:	4 mm
Caster	30 deg - Kick-up: 25 / Block insert: +5
Bulkhead Type:	Plastic

Front camber turnbuckles L:21.4 R:21.8

Bump Steer Spacing: 0 mm

Steering Plate: B6 FT Carbon

Steering Stop Spacing: 0 mm

Caster Block Spacing: 0 / 1

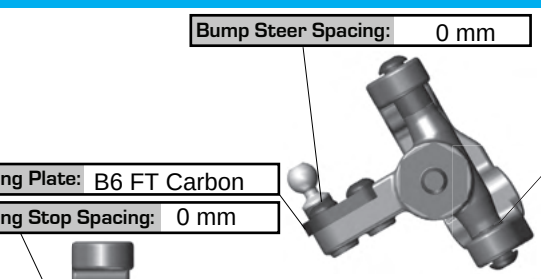

Ball Stud Spacing: 0 mm

Axle Height: -3

More: sodialed.com/setups

Ball Stud Spacing: 0 mm

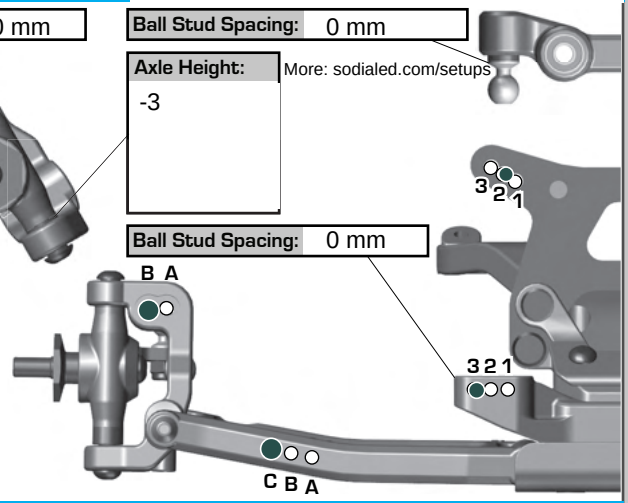

Rear Suspension:

Ride Height:	16 mm
Camber:	-2 degrees
Anti-Roll Bar:	1.3mm Gray
Arm Type:	73mm
Tower Type:	Wide
Arm Spacing:	Short (forward)
Wheel Hex:	7mm
Shock Mounting Position:	Front of Arm ● Rear of Arm ☐
Hub Spacing:	Fwd ● Mid ☐ Back ☐
CVA Bone Length:	69mm
CVA Axle Type:	

Rear turnbuckle lengths: L/R:22.8mm

C Mount: Wide aluminum

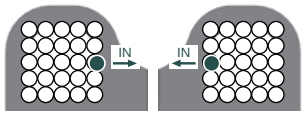

D Mount: Wide aluminum

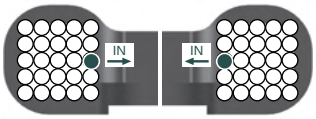

Axle Height:		
○	▼0 3▲	+3
●	▼1 2▲	+2
○	▲1 2▼	+1
○	▲0 3▼	+0

Camber Link Spacing: 2 mm

Ball Stud Spacing: 2 mm

Ball Stud Spacing: 6 mm

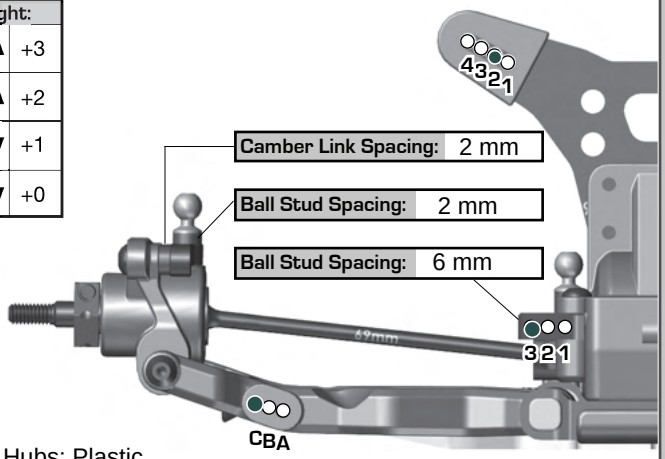

Hubs: Plastic

Electronics:

Radio:	Futaba	Servo:	
EPA:	Throttle: %	Brake:	%
ESC:	REDS	ZX Pro 160A	
ESC Settings:			
Motor:	REDS	VX2	
Wind:	7.5	Timing:	20 deg
Pinion:	23	Spur:	78
Battery:	Centro	C5015	5000
Battery Position:	Front hole / 3		
Battery Weight:	Centro 5000mah		

Drivetrain:

Transmission: Laydown

Differential: Ball Diff: ☐

Height: 2 mm Gear Diff: ●

Gear Diff Mass: 5,000 cst

Notes:

Slipper Clutch:

Type:	Slipper; HD B6.3
# of Pads:	2 x 11mm ID Octalock LCF
Setting:	

Shocks:

Oil: Team Associated

	Front	Rear
Piston:	2mm 2x1.5mm FT v2	2mm 2x1.6mm FT v2
Fluid:	45 wt	35 wt
Spring:	4.60lb Red	2.20lb Blue
Limiters:	int/ext: 0 / 0 mm	int/ext: 1 / 0 mm
Stroke:	24 mm	28 mm
Eyelet Length:	+0mm Short	+2mm Long
Cup Offset:	5 mm	0 mm

Notes:

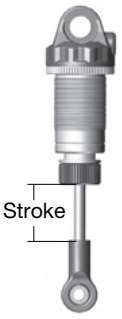

Track Info:

Size:	Medium/Open
Surface:	Indoor carpet
Traction:	High
Moisture:	Dry
Condition:	Smooth
Temperature:	Ambient: 15C/59F Track: 15C/59F
Notes:	

Tires:

Front Tires:	Schumacher Split stagger
Front Compound:	Silver
Front Insert:	None
Rear Tires:	Schumacher split stagger
Rear Compound:	Yellow
Rear Insert:	Schumacher pre-glued
Wheel (F/R):	F: Schumacher white

Front tread condition - 4/10 Rear tread condition - 3/10

Body, Weight:

Body:	Kit
Front Wing:	Kit
Rear Wing:	Kit
Wing Angle:	6 degrees
Chassis Length:	B6.3 +3mm
Servo Weights:	
Electronic Weights:	R: Schumacher white
Total Vehicle Weight:	

Vehicle Comments: