RC10 B74.2 TEAM KIT

Setup: 74.2D - Dirt - Critters

Driver: Vin Manchanda — Team Associated
Event: Club
Date: March 4, 2024
Track: Crispy Critters
Qualify: ____ **TQ:** ☐ **Main:** ____ **Finish:** ____ **Best Lap Time:** ____

Front Suspension:

Open in So Dialed App

Ride Height:	15 mm
Camber:	-1 degrees
Toe:	+1 degrees
Anti-Roll Bar:	1.1mm
Arm Type:	Gull wing
Tower Type:	B74.2 Gull wing
Wheelbase Shim:	1 mm
Wheel Hex:	5mm
Caster Block:	8 ° ☐ 9 ° ◉ 10 ° ☐
Chassis Brace Support:	Plastic & fiberglass
Top Plate Brace:	None
Front Axles:	CVA ◉ DCV ☐
Notes:	



Front Chassis Brace Screws:

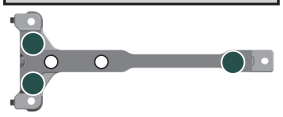

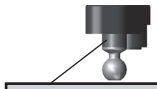

Ball Stud Spacing: 1 mm

Arm Mount A: 1 ° ☐ 0 .5° ☐ Gray ☐ Black ☐



Arm Mount B: 1 ° ☐ 0 .5° ☐ Gray ☐ Black ☐



Diff Height:
+2 ☐
+0 ◉



Axle Height: More: sodialed.com/setups
+3 ☐ +2 ◉ +1 ☐ 0 ☐

Ball Stud Spacing: 0 mm

Steering Plate: Kit

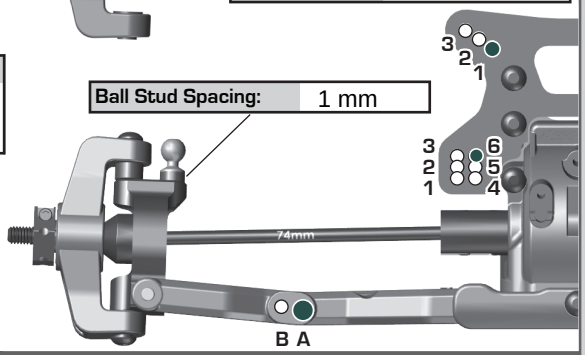

Rear Suspension:

Ride Height:	15 mm
Camber:	-1 degrees
Anti-Roll Bar:	1.3mm
Arm Type:	Kit
Wheelbase Shim:	Short (arm forward)
Wheel Hex:	6mm
Chassis Brace Support:	Plastic & fiberglass
Hub Spacing:	Fwd ◉ Mid ☐ Back ☐
Notes:	

Rear Chassis Brace Screws:

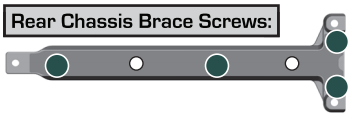

Arm Mount C: 1 ° ☐ 0 .5° ◉ Gray ☐ Black ☐

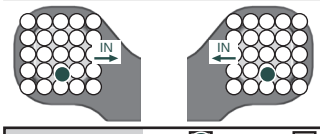

Arm Mount D: 1 ° ◉ 0 .5° ☐ Gray ☐ Black ☐



Diff Height:
+3 ☐
+2 ☐
+1 ☐
+0 ◉

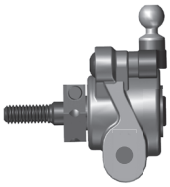

Axle Height:

◉	▼0 3▲	+3
○	▼1 2▲	+2
◉	▲1 2▼	+1
○	▲0 3▼	+0

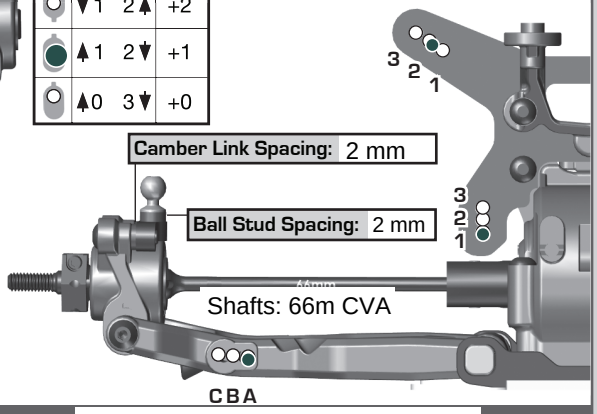

Electronics:

Radio:	Sanwa/Airtronics	Servo:	Reedy
EPA:	Throttle: %	Brake:	%
ESC:	Reedy	610R	
ESC Settings:			
Motor:	Reedy	SP5 13.5	Timing:
Pinion:	22	Spur:	78
Battery:	Reedy	4800 LCG shorty	4800 mAh

Battery Position:
Back 1 ☐ 2 ☐ 3 ☐ 4 ◉ Forward

Battery Weight:

Differential:

	Front	Center	Rear
Fluid:		500,000	
Gears:	Molded	Molded	Molded
Type:	LTC	LTC	LTC

FT #92372 Lightweight Driveline
10,000 8,000

Slipper Clutch:

Type:	
# of Pads:	
Setting:	

Shocks:

Oil: Team Associated

	Front	Rear
Piston:	2 x 1.6mm	2 x 1.7mm
Thickness:		
Fluid:	30 wt	30 wt
Spring:	3.8lb Yellow	2.2lb Blue
Limiters:	0 / 0 mm int/ext	0 / 0 mm int/ext
Stroke:	22 mm	28.5 mm
Eyelet Length:	+2 mm	+0 mm
Cup Offset:	9 mm	0 mm
Notes:		



Track Info:

Size:	Tight
Surface:	Indoor clay
Traction:	Low
Moisture:	Wet
Condition:	Bumpy
Temperature:	Ambient: 21C/70F Track: 16C/60F
Notes:	

Tires:

Front Tires:	
Front Compound:	
Front Insert:	
Rear Tires:	
Rear Compound:	
Rear Insert:	
Wheel (F/R):	
Notes:	

Body, Wing, Weight:

Body:	Lightweight
Front Wing:	Yes ☐ No ☐
Rear Wing:	Kit
Wing Angle:	0° ☐ 6° ◉
Wing Mount Height:	0 ◉ -2 ☐
Servo Weights:	
Electronic Weights:	
Total Vehicle Weight:	

Vehicle Comments: