XPRESS EXECUTE XQ11 SET-UP SHEET

Setup: Chippenham - Iconic Cup Winter Series
Open in So Dialed App
More: sodialed.com/setups

Driver Mark Raddenbury | **Track Surface** | **Track Temperature**

Date December 13, 2023 | **Track Traction** High | **Result** 8 | **Air Temperature**

Track Chippenham | **Country** | **Best Lap** | **Humidity** | **Remark**

Front

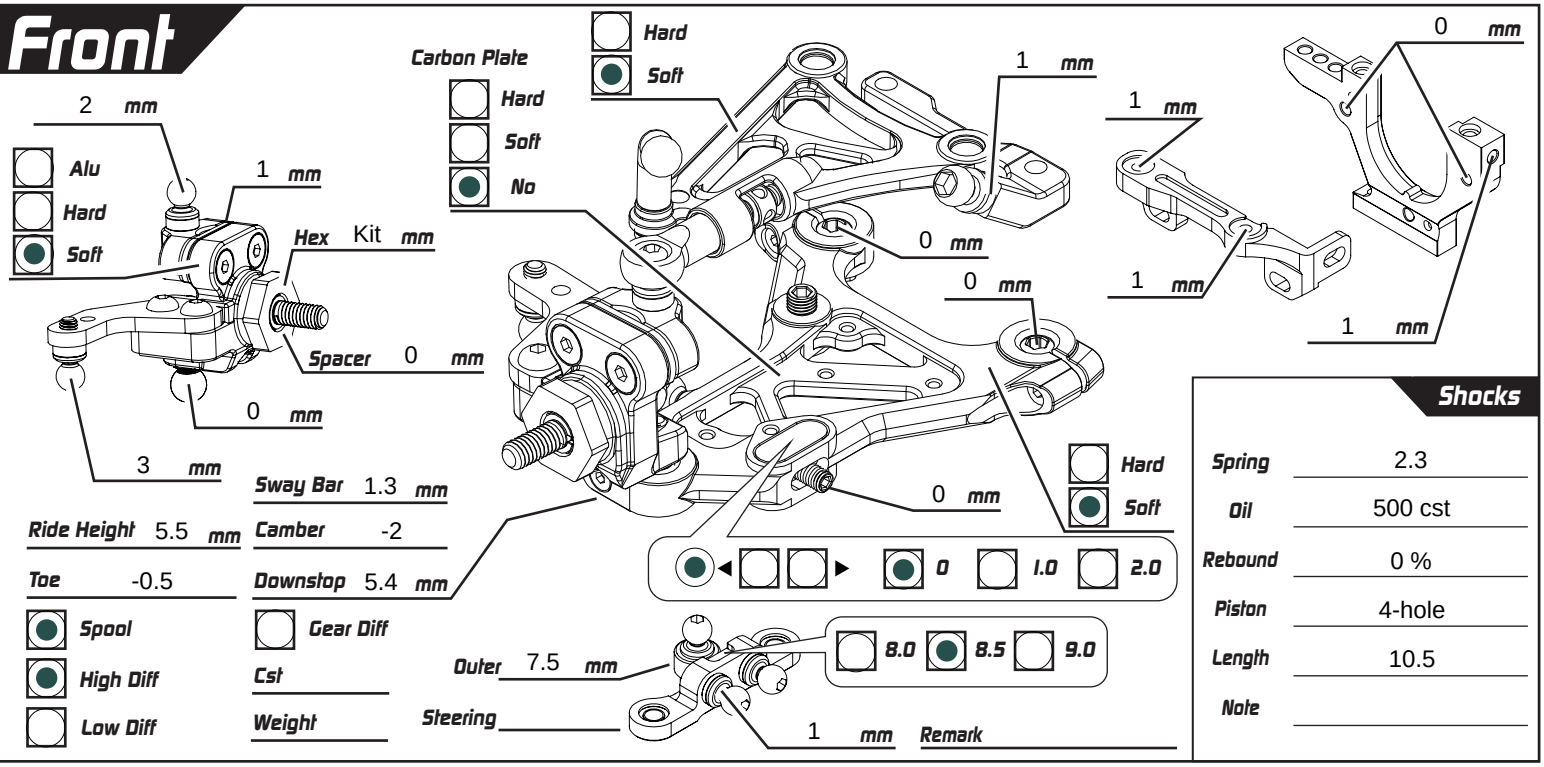

Sway Bar 1.3 mm | Ride Height 5.5 mm | Camber -2 | Toe -0.5 | Downstop 5.4 mm

Spool | High Diff | Low Diff | Gear Diff | Cst | Weight

Remark

Shocks

Spring	2.3
Oil	500 cst
Rebound	0 %
Piston	4-hole
Length	10.5
Note	

Rear

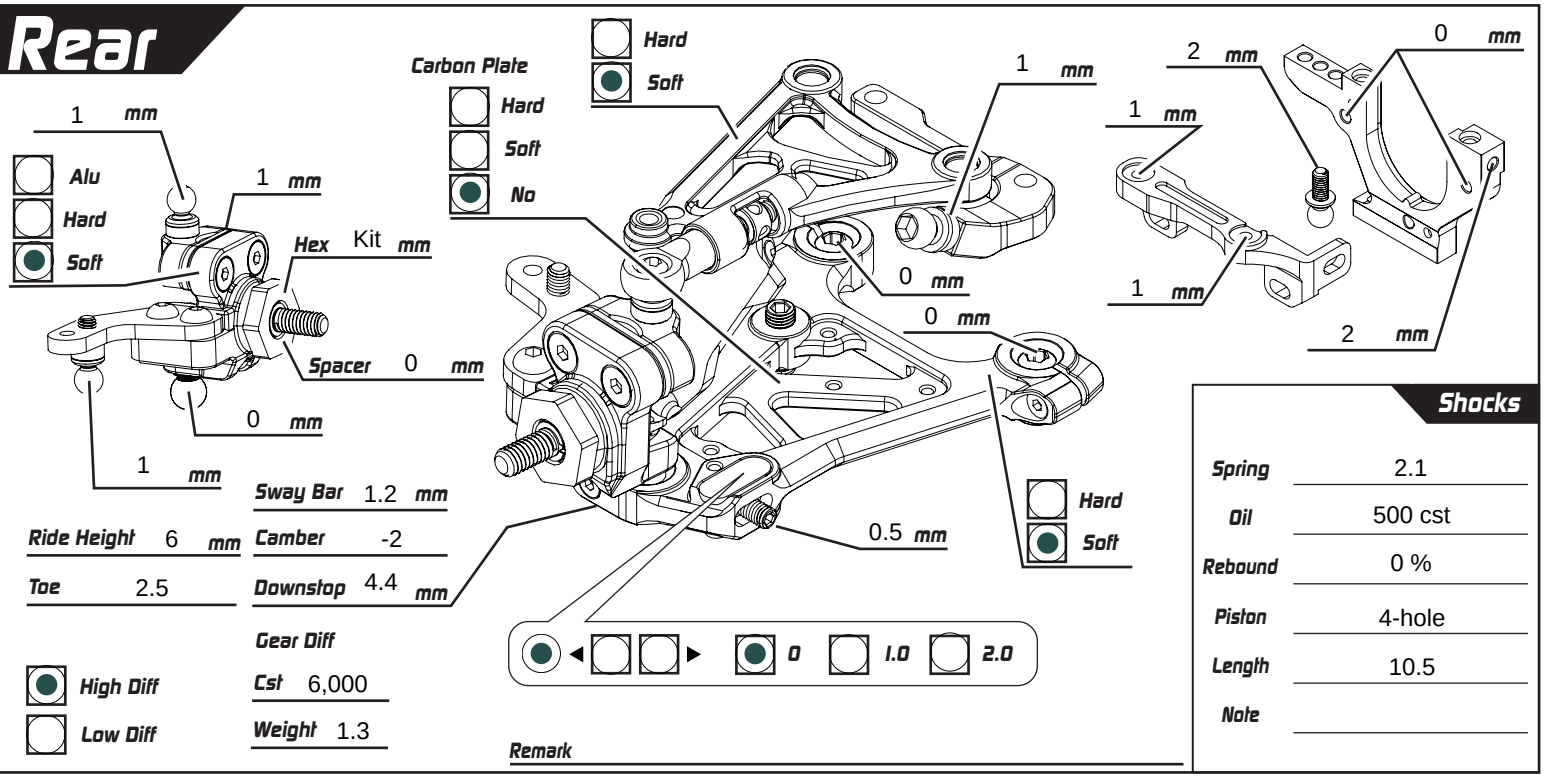

Sway Bar 1.2 mm | Ride Height 6 mm | Camber -2 | Toe 2.5 | Downstop 4.4 mm

Gear Diff | High Diff | Low Diff | Cst 6,000 | Weight 1.3

Remark

Shocks

Spring	2.1
Oil	500 cst
Rebound	0 %
Piston	4-hole
Length	10.5
Note	

Weight g

Battery Optimax | Body Wolverine

Tires Xpress | Additive Spider grip blue

Servo Horn Height mm

ESC Hobbywing | Motor Hobbywing

Spur 48 P/ 76 T | Servo Ludicrous lipo

Pinon P/ 32 T | FDR 4.52

Weight g

Weight g

Carbon | Alu

Weight g

