XPRESS EXECUTE XQ11 SET-UP SHEET

Setup: New carpet base
Open in So Dialed App

More: sodialed.com/setups

Driver Mark Raddenbury | **Track Surface** | **Track Temperature**

Date February 14, 2024 | **Track Traction** Medium | **Result** | **Air Temperature**

Track Forest of Dean | **Country** | **Best Lap** 7.32 | **Humidity** | **Remark**

Front

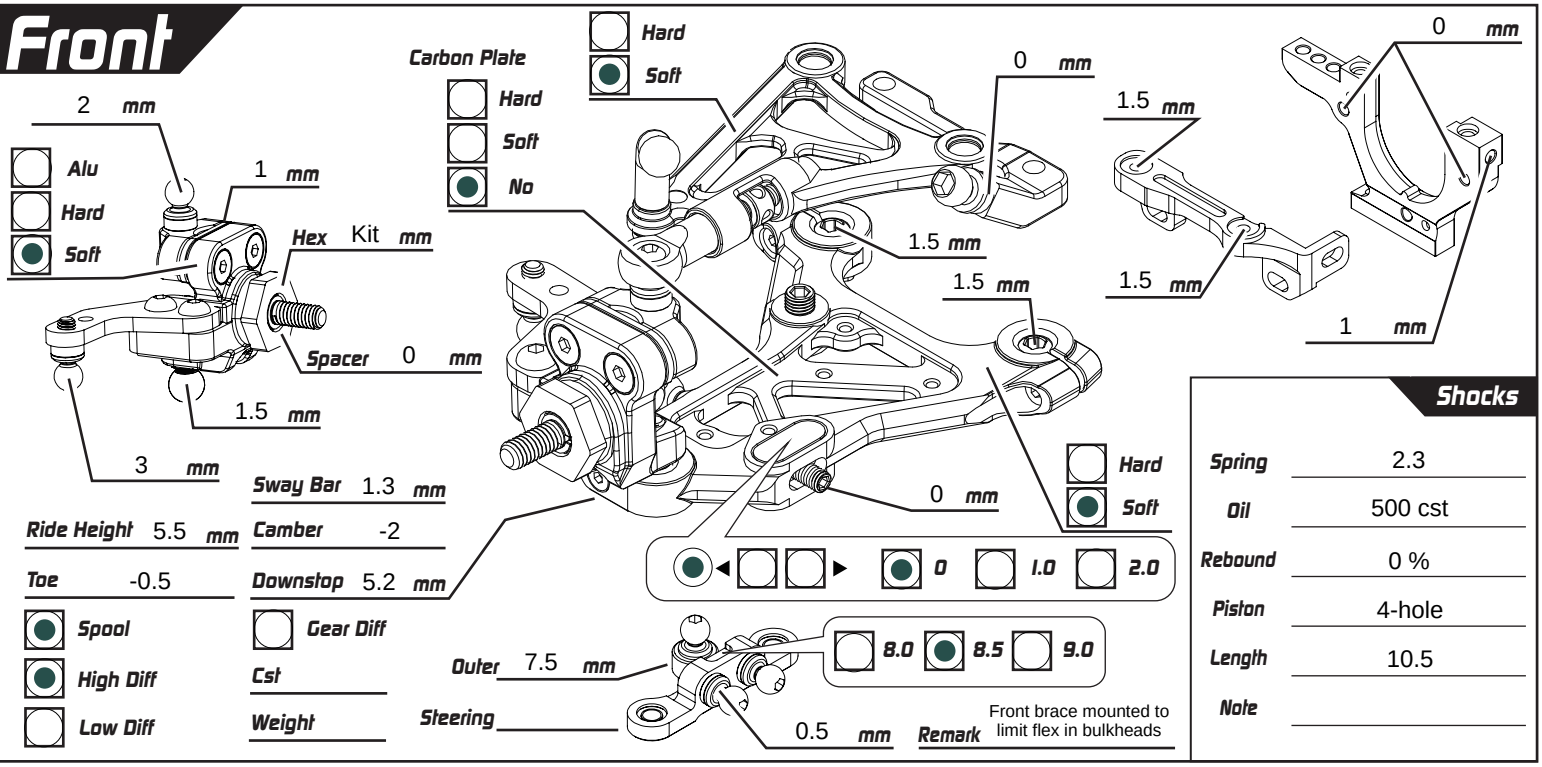

Sway Bar 1.3 mm | **Ride Height** 5.5 mm | **Camber** -2 | **Toe** -0.5 | **Downstop** 5.2 mm

Spool | High Diff | Low Diff

Gear Diff | **Cst** | **Weight**

Remark Front brace mounted to limit flex in bulkheads

Shocks

Spring	2.3
Oil	500 cst
Rebound	0 %
Piston	4-hole
Length	10.5
Note	

Rear

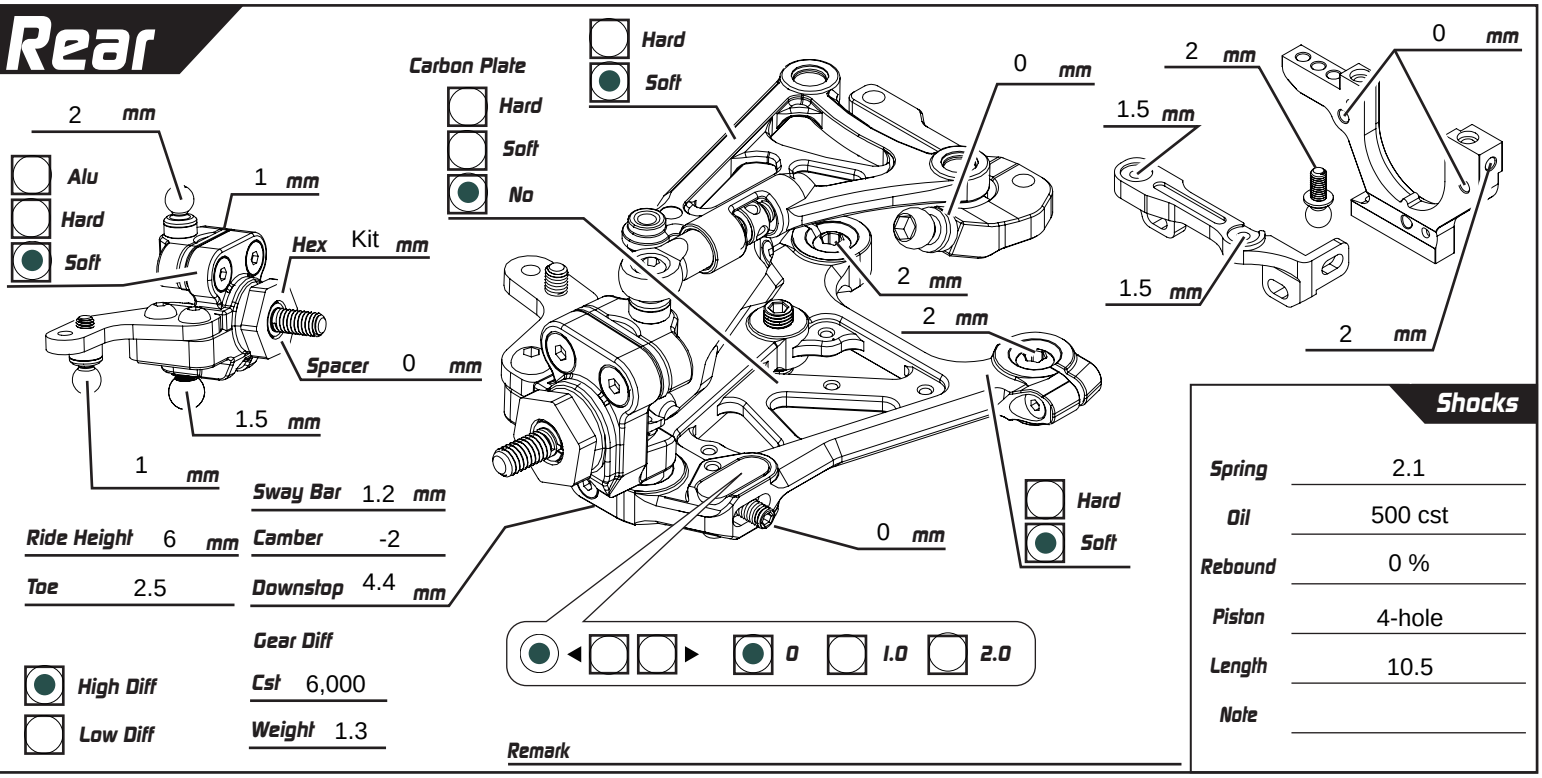

Sway Bar 1.2 mm | **Ride Height** 6 mm | **Camber** -2 | **Toe** 2.5 | **Downstop** 4.4 mm

Gear Diff

High Diff | Low Diff

Cst 6,000 | **Weight** 1.3

Remark

Shocks

Spring	2.1
Oil	500 cst
Rebound	0 %
Piston	4-hole
Length	10.5
Note	

Weight g

Battery Optimax | **Body** Speciale

Tires Rush | **Additive** Spider grip blue

Servo Horn Height mm

ESC Hobbywing | **Motor** Hobbywing

Spur 48 P/ 76 T | **Servo** Ludicrous lipo

Pinon P/ 26 T | **FDR** 5.55

Weight g

Weight g

Carbon | Alu

Weight g

