RC10 B7 TEAM KIT RC10 B7D TEAM KIT

Driver:	Erik Bee	**Event:**	Supercross	**Qualify:**		**Main:**	Main
Date:	February 24, 2024	**Track:**	SDRC	**Finish:**	2	**Best Lap Time:**	18.8 s

Front Suspension:

Setup: Current B7

Open in So D

Ride Height:	18 mm
Camber:	-1 deg
Toe:	0 deg
Anti-Roll Bar:	
Arm Type:	Standard
Tower Type:	Standard
Wheel Hex:	5 mm
Steering Block KPI:	2
Caster Block Insert:	0 ☐ +2.5 ☐ +5 ☐
Bulkhead Type:	0 deg aluminum
Kick-Up Angle:	-2.5 ☐ 0 ● +2.5 ☐
Steering Stop Spacing:	0 mm
Caster Block Spacing:	Fwd ● Back ☐

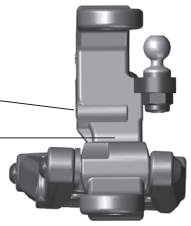

Ball Stud Spacing:	1
Ball Stud Spacing:	0
Bump Steer Spacing:	0
Steering Plate:	+1mm

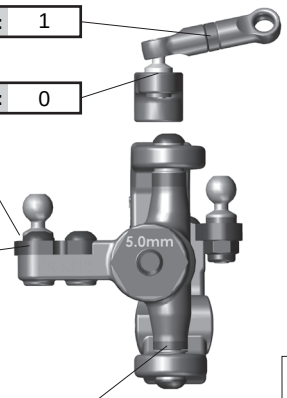

Axle Height:	
+3	☐
+2	☐
+1	●
+0	☐

Steering Bellcrank Position:	Up ● Down ☐

More: sodialed.com/setups

Ball Stud Spacing:	1
Ball Stud Spacing:	1
Ball Stud Spacing:	2

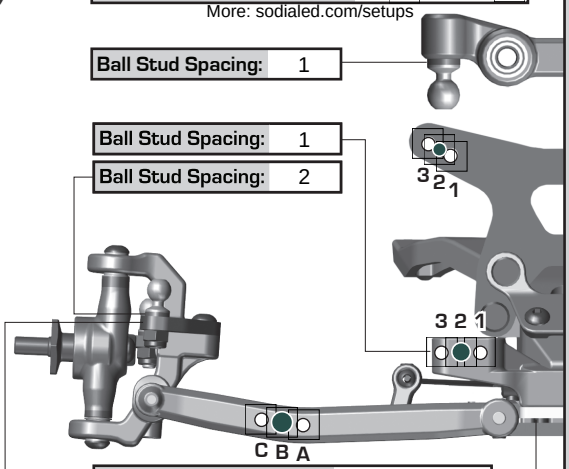

Caster Block Link Mount:	+0
Front Bulkhead Spacing:	1

Rear Suspension:

Ride Height:	18 mm
Camber:	-1 deg
Anti-Roll Bar:	
Arm Type:	Standard
Tower Type:	Standard
Arm Spacing:	Fwd ☐ Mid ● Back ☐
Wheel Hex:	5 mm
Hub Type:	Standard
Hub Spacing:	Fwd ☐ Mid ● Back ☐
Drive Shaft:	CVA's ● Universals ☐

C Mount:
Standard

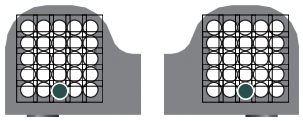

D Mount:
Standard

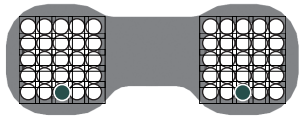

Axle Height:		
▼0	3▲	+3
▼1	2▲	+2
●1	2▼	+1
▲0	3▼	+0

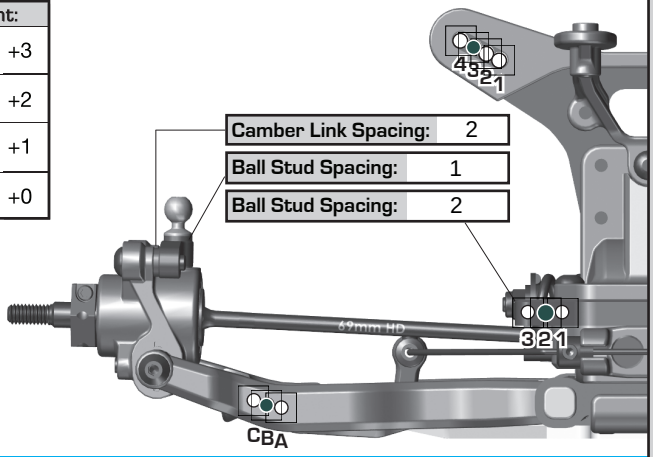

Camber Link Spacing:	2
Ball Stud Spacing:	1
Ball Stud Spacing:	2

Electronics:

Radio:	Flysky	Servo:	ProTek
EPA:	Throttle: %	Brake:	%
ESC:	Hobbywing		
ESC Settings:	Blinky		
Motor / Wind:	Hobbywing 21.5 T	Timing:	
Pinion:	35	Spur:	69

Battery Mount: Std ● Offset ☐

Back 1 ● 2 ☐ 3 ☐ 4 ☐ 5 ☐ Forward

Battery:	ProTek	Weight:	
Notes:			

Drivetrain:

Differential:		Ball Diff:	●
Height:	1 mm	Gear Diff:	☐
Diff Setting:			
Notes:			

Slipper Clutch:

Type:	Slipper
# of Pads:	Nova carbon slipper
Setting:	

Shocks:

	Front	Rear
Piston:	2.5mm 2x1.8mm holes	2.5mm 2x1.9mm holes
Thickness:		
Fluid:	30 wt	30 wt
Spring:	3.4lb Gray	1.9lb White
Limiters:	Int:___ Ext:___	Int:___ Ext:___
Stroke:	23 mm	28 mm
Eyelet:	+2 mm	+4 mm
Cup Offset:	0 ☐ +5 ● +9 ☐	0 ● +5 ☐ +9 ☐



Kashima Bodies: ☐	Chrome Shafts: ☐	Machined Spacers: ☐	
Notes:			

Track Info:

Size:	Open
Surface:	Indoor clay
Traction:	High
Moisture:	Dry
Condition:	Smooth
Temperature:	21C/70F
Notes:	

Tires:

Front Tires:	Jconcepts smoothie 2
Front Compound:	Silver
Front Insert:	Stock
Rear Tires:	Jconcepts smoothie 2
Rear Compound:	Silver
Rear Insert:	Stock
Wheel (F/R):	Jconcepts Jconcepts
Notes:	

Body, Weight:

Body:	B7
Front Wing:	None
Rear Wing:	B7 7"
Wing Angle:	0° ● 3° ☐ 6° ☐
Chassis Length:	B7 +0mm
Servo Weights:	
Electronic Weights:	11g Aluminum
Total Vehicle Weight:	

Vehicle Comments:

2nd place

:: For more setups, visit https://www.associatedelectrics.com/teamassociated/manuals_and_setup_sheets/