RC10 B7 TEAM KIT RC10 B7D TEAM KIT

Driver: Manuel Dietrich Event: Qualify: Main:

Date: June 9, 2025 Track: Finish: Best Lap Time:

Front Suspension:

Setup: Wollerau

Open in So D

Ride Height:	16 mm
Camber:	-1.5 deg
Toe:	-1 deg
Anti-Roll Bar:	0.8 mm
Arm Type:	Standard
Tower Type:	RDRP -2
Wheel Hex:	6.5 mm
Steering Block KPI:	2
Caster Block Insert:	0 ☐ +2.5 ● +5 ☐
Bulkhead Type:	+/- 2,5 Steel
Kick-Up Angle:	-2.5 ☐ 0 ● +2.5 ☐
Steering Stop Spacing:	0 mm
Caster Block Spacing:	Fwd ● Back ☐

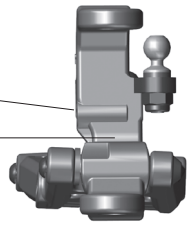

Ball Stud Spacing:	1
Ball Stud Spacing:	1
Bump Steer Spacing:	0
Steering Plate:	+1mm

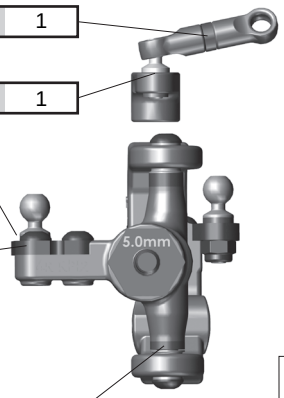

Axle Height:

+3	●
+2	☐
+1	☐
+0	☐

Steering Bellcrank Position:	Up ● Down ☐

More: sodialed.com/setups

Ball Stud Spacing:	1
Ball Stud Spacing:	1
Ball Stud Spacing:	2

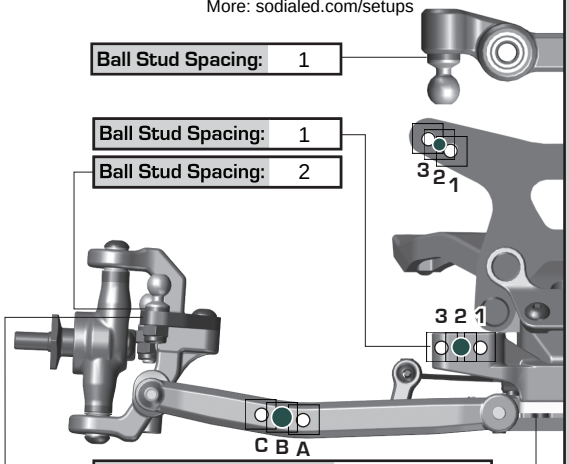

Caster Block Link Mount:	+0
Front Bulkhead Spacing:	1

Rear Suspension:

Ride Height:	17 mm
Camber:	-2 deg
Anti-Roll Bar:	
Arm Type:	Standard
Tower Type:	RDRP -2
Arm Spacing:	Fwd ☐ Mid ● Back ☐
Wheel Hex:	7 mm
Hub Type:	Standard
Hub Spacing:	Fwd ☐ Mid ● Back ☐
Drive Shaft:	CVA's ● Universals ☐

C Mount: Standard

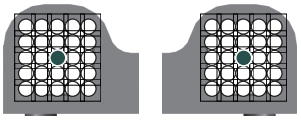

D Mount: Standard

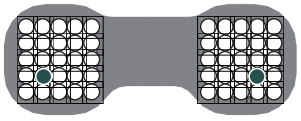

Axle Height:

●	▼0 3▲	+3
☐	▼1 2▲	+2
☐	▲1 2▼	+1
☐	▲0 3▼	+0

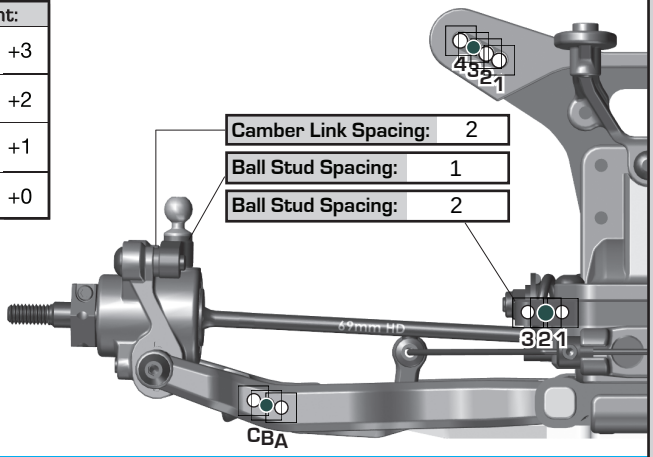

Camber Link Spacing:	2
Ball Stud Spacing:	1
Ball Stud Spacing:	2

Electronics:

Radio:		Servo:	KST
EPA:	Throttle: %	Brake:	%
ESC:	Reedy		
ESC Settings:			
Motor / Wind:	Ruddog 6 T	Timing:	30
Pinion:	22	Spur:	78

Battery Mount: Std ● Offset ☐

Back 1 ● 2 ☐ 3 ☐ 4 ☐ 5 ☐ Forward

Battery:	Reedy	Weight:	
Notes:			

Drivetrain:

Differential:		Ball Diff:	☐
Height:	2 mm	Gear Diff:	●
Diff Setting:	10,000 cst		
Notes:			

Slipper Clutch:

Type:	Slipper
# of Pads:	2 x 19mm
Setting:	

Shocks:

	Front	Rear
Piston:	2mm 3x1.6mm	2mm 3x1.7mm
Thickness:		
Fluid:	35 wt	30 wt
Spring:	4.0lb Red	2.3lb Yellow
Limiters:	Int:___ Ext:___	Int:___ Ext:___
Stroke:	21 mm	26 mm
Eyelet:	+2 mm	+4 mm
Cup Offset:	0 ☐ +5 ● +9 ☐	0 ● +5 ☐ +9 ☐



Kashima Bodies: ☐ Chrome Shafts: ☐ Machined Spacers: ☐

Notes:

Track Info:

Size:	
Surface:	
Traction:	
Moisture:	
Condition:	
Temperature:	
Notes:	

Tires:

Front Tires:	Schumacher Fusion slim
Front Compound:	Yellow
Front Insert:	Yes
Rear Tires:	Schumacher
Rear Compound:	Mini dart
Rear Insert:	
Wheel (F/R):	JC JC
Notes:	

Body, Weight:

Body:	B7 lightweight
Front Wing:	B7
Rear Wing:	B7 7"
Wing Angle:	0° ● 3° ☐ 6° ☐
Chassis Length:	B7 +0mm
Servo Weights:	
Electronic Weights:	11g Aluminum
Total Vehicle Weight:	

Vehicle Comments:

:: For more setups, visit https://www.associatedelectrics.com/teamassociated/manuals_and_setup_sheets/