Setup: Base Setup
Open in So Dialed App

TEKNO RC Setup Sheet — SCT410 2.0

Name: _____ Date: September 13, 2026 Event: _____ Ambient Temp: 27C/80F

Track: INDOOR ○ OUTDOOR ○ (Outdoor hard-packed)
Size: SMALL ● MEDIUM ● LARGE ○ (More: sodialed.com/setups)
Traction: LOW ● MEDIUM ● HIGH ○
Surface: SMOOTH ○ BUMPY ● RUTTED ●
Type: LOOSE / LOAMY ○ HARD PACKED ○ BLUE GROOVE ○ CLAY ○ ASTRO ○
Condition: DUSTY ● DRY ● WET ○ MUDDY ○

Ackerman/Bumpsteer/Servo Saver









Front End:

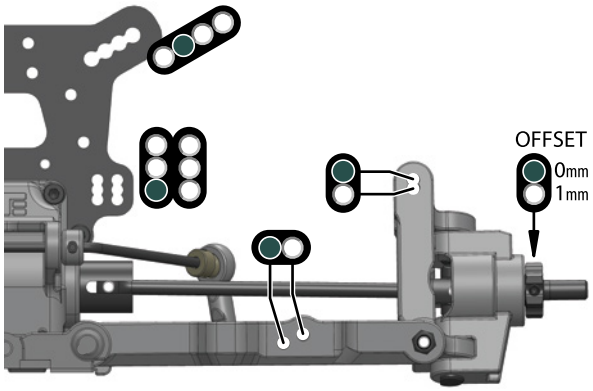

Suspension:

RIDE HEIGHT: 26 CAMBER: -1
CASTER BLOCK: 18 SWEEP: 0
KICK UP: 10 TOE: +0.5
SWAY BAR: 2.3 DROOP: 96.82

Shocks:

OIL: 650 cst BRAND: PT RC
PISTON: 5 x 1.1mm SPRING: 5.29lb LF Red
REBOUND: 0 % BUILD: Emulsion

Rear End:

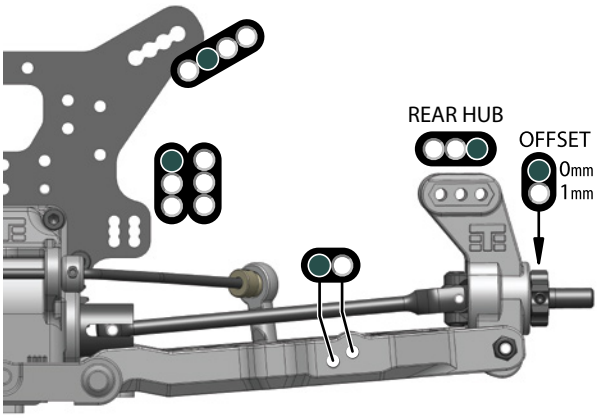

Suspension:

RIDE HEIGHT: 31 CAMBER: -2
ANTI-SQUAT: 1 TOE: 2.5
SWAY BAR: None DROOP: 107.62

Shocks:

OIL: 600 cst BRAND:
PISTON: 5 x 1.2mm SPRING: 4.47lb Yellow
REBOUND: 0 % BUILD: Emulsion

Wheelbase:

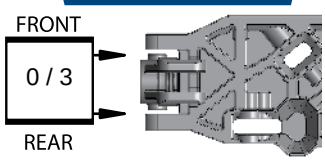

(Shims)
(Thick - 2mm)
(Thin - 1mm)

Optional Hinge Pin Braces:

"A" Block:



TKR9161 (0mm)
TKR9161B (-1mm)

"B" Block:



TKR9162 (0mm)
TKR9162B (-1mm)

"C" Block:



TKR9163B (-1mm)
TKR9163C (-2mm)

"D" Block:



TKR9164B (-1mm)
TKR9164C (-2mm)

Chassis Braces:

TURNBUCKLE BRACE: ○ CENTER BRACE: ○
REAR BRACE: ●

Tires / Wheels:

BRAND / TREAD: JConcepts Choppers
COMPOUND: Blue-soft
INSERT: Black
WHEEL: JConcepts Hazard
NOTES:

Body/Body Mounts:

BODY MAKE: RC Comet - Rhythm

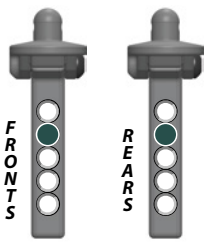

Differentials:

OPTION	FRONT	CENTER	REAR
Diff Oil	10,000	10,000	7,000
(TKR5145B)	●	●	●
(TKR5145C)	○	○	○
(TKR9114)	○	○	○
(TKR9114HD)	●	●	●
(TKR51114XB)	○	○	○
(TKR5150)	○	○	○
(TKR5150B)	●	●	●
(TKR5113B)	●	●	●
(TKR5113S)	○	○	○
(TKR5113)	○	○	○
(TKR5149X)	●	●	●
(TKR5149A)	○	○	○
(TKR5149)	○	○	○

Drivetrain:

PINION/SPUR: 16 / 41

Equipment:

ESC: Hobbywing
BATTERY: CNHL
MOTOR: Hobbywing
SERVO: AGFrc

Notes: