RC8 B4.1e

Driver: Vin Manchanda | **Event:** 2024 Season opener
Date: April 30, 2025 | **Track:** Trains n Lanes Hobbies PA
Qualify: | **TQ:** ☐ | **Main:** | **Finish:** 1 | **Best Lap Time:**

Front Suspension:

Setup: Trains n Lanes PA | Open in So Dialed App | RESET

- **Ride Height:** 24 mm
- **Toe:** +2 deg | **Hex:** +0mm
- **Anti-Roll Bar**
  - **Size:** 2.1 mm
  - **Gap:** 2.0 mm
- **Ackerman** (3 2 1, TOP)
- **Steering Arm Plate:** +1 degree
- **Drive Shaft:** CVAs: ☐ Universals: ●
- **Upper Arm Material:** Soft
- **Lower Arm Material:** Kit
- Notes: 16 KPI Front end kit

Caster Shim: 3 mm
Insert: None

More: sodialed.com/setups

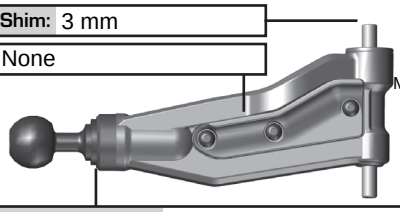

Upper Ball Type & Shims: 1.4

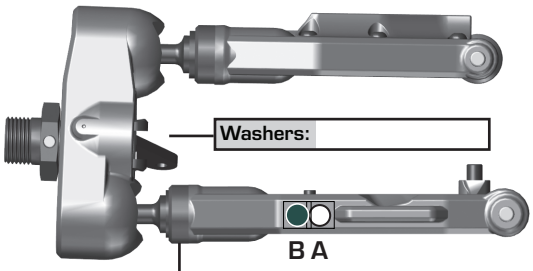

Washers:

Lower Ball Type & Shims: 0

Wheelbase Shim: 0 mm
Insert: None

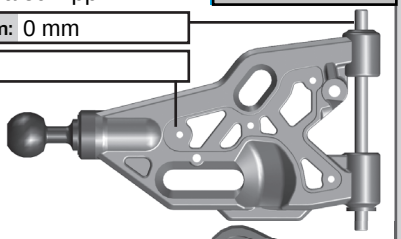

Upper Arm Mount:
Arm Mount A:
Arm Mount B:

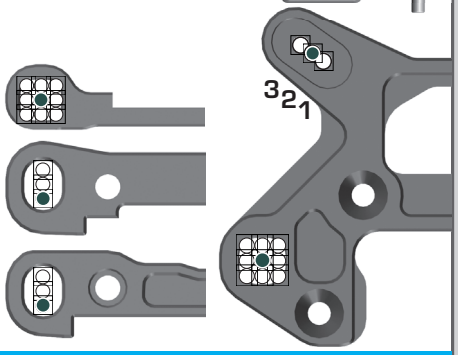

Rear Suspension:

- **Ride Height:** 25 mm
- **Camber:** -1.5 deg | **Hex:** +1mm
- **Anti-Roll Bar**
  - **Size:** 2.4 mm
  - **Gap:** 0 mm
- **Drive Shaft:** CVAs: ☐ Universals: ●
- **Chassis Brace**
  - **Pivot Type:** Kit
  - **Insert Type:** None
- **Arm Material:** Soft
- **Notes:**

Hub Tower: Std: ☐ High / Low: ●

Swaybar Ball Leverage: Wide: ● Narrow: ☐

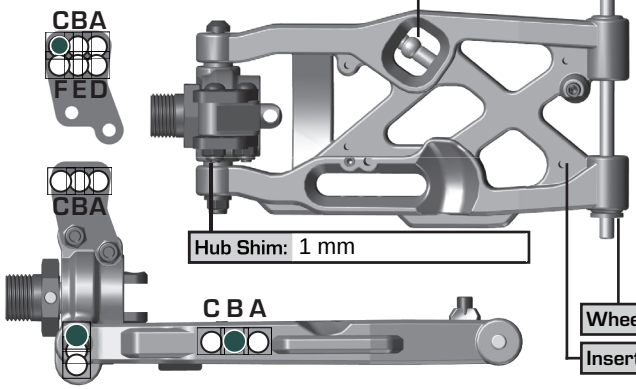

Hub Shim: 1 mm

Arm Mount C:
Arm Mount D:

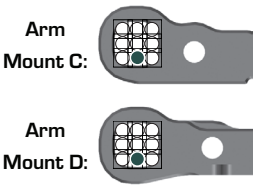

Wheelbase Shim: 0 mm
Insert: None

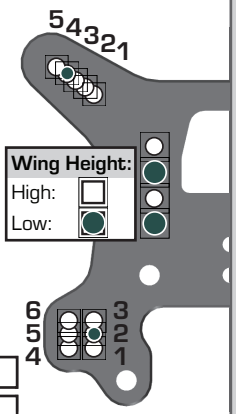

Electronics:

- **Radio:** Flysky | **Receiver:**
- **Steering Servo:** Reedy | Speed:
- **EPA:** Throttle: | Brake: | Steering:
- **EXPO:** Throttle: | Brake: | Steering:
- **Coast:** | **D/R:**
- **ESC:** Reedy | BEC:
- **Motor:** Reedy
- **Battery:** Reedy | Brick ☐ | Saddle ●
- **Battery Position:** Rear ☐ | Center ● | Forward ☐
- **Chassis Layout:** FWB ● | RWB ☐

Differential:

	Front	Center	Rear
Fluid:	10,000	10,000	6,000
Gears:	High traction	High traction	High traction
Mass:			

Gearing:

- **Spur Gear:** 46 | **Pinion:**
- **Notes:**

Shocks:

	Front	Rear
Piston:	Schelle XTR 5 hole	Schelle XTR 5 hole
Fluid:	42.5 wt	40 wt
Bladder:	Kit	Kit
Rebound:	0 %	0 %
Spring:	81658 White 1.5D	81662 AE White 1.5D
Length:	101 mm	124 mm
Eyelet:	+2 mm	+2 mm



Track Info:

- **Size:** Medium
- **Surface:** Outdoor clay
- **Traction:** Medium
- **Moisture:** Dry
- **Condition:** Medium
- **Temperature:** 18C/65F
- **Notes:**

Tires:

- **Front Tires:** JCONCEPTS Relapse
- **Front Compound:** Blue/soft
- **Front Insert:**
- **Rear Tires:** JCONCEPTS Relapse
- **Rear Compound:** Blue/ soft
- **Rear Insert:**
- **Wheel (F/R):** JCONCEPTS Bullet wheels
- **Notes:**

Body, Weight:

- **Body:** JC S15
- **Nose Cone:**
- **Rear Wing:** JC Razor
- **Wing Angle:** 0° ☐ 2° ● 4° ☐
- **Wing Buttons:** Flat ☐ Fin ☐
- **Vent Holes:**
- **Total Weight:**
- **Notes:**

Vehicle Comments: