RC8 B4.1

Driver: Vin Manchanda | **Event:** Practice
Date: October 24, 2024 | **Track:** LCRC Raceway
Qualify: | **TQ:** ☐ | **Main:** | **Finish:** | **Best Lap Time:**

Front Suspension:

Setup: LCRC | Open in So Dialed App | RESET

- **Ride Height:** 24 mm
- **Toe:** +2 deg | **Hex:** +1mm
- **Anti-Roll Bar**
  - **Size:** 2.2 mm
  - **Gap:** 2.0 mm
- **Ackerman** (3 2 1 — TOP)
- **Steering Arm Plate:** 0 degree #81066
- **Drive Shaft:** CVAs: ☐ Universals: ◉
- **Upper Arm Material:** Soft
- **Lower Arm Material:** Kit
- Notes: No blue cap on upper arm

- **Caster Shim:** 3 mm
- **Insert:** None

More: sodialed.com/setups

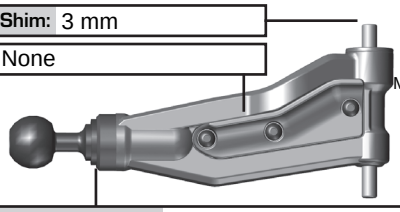

- **Upper Ball Type & Shims:** 2.8

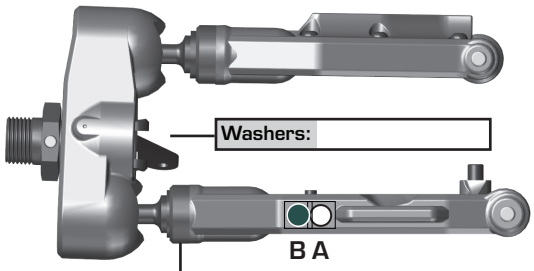

- **Washers:**
- **Lower Ball Type & Shims:** 0.0

- **Wheelbase Shim:** 1 mm
- **Insert:** None

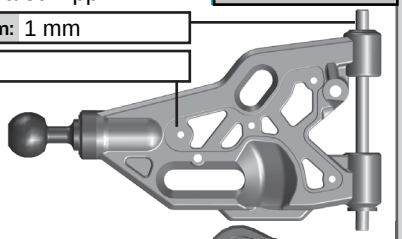

Upper Arm Mount: | Arm Mount A: | Arm Mount B:

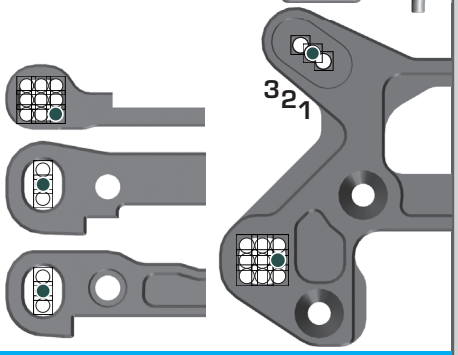

Rear Suspension:

- **Ride Height:** 26 mm
- **Camber:** -1 deg | **Hex:** +1mm
- **Anti-Roll Bar**
  - **Size:** 2.4 mm
  - **Gap:** 0 mm
- **Drive Shaft:** CVAs: ☐ Universals: ◉
- **Chassis Brace**
  - **Pivot Type:** Kit
  - **Insert Type:** Kit
- **Arm Material:** Soft
- **Notes:**

- **Hub Tower:** Std: ☐ High / Low: ◉
- **Swaybar Ball Leverage:** Wide: ◉ Narrow: ☐

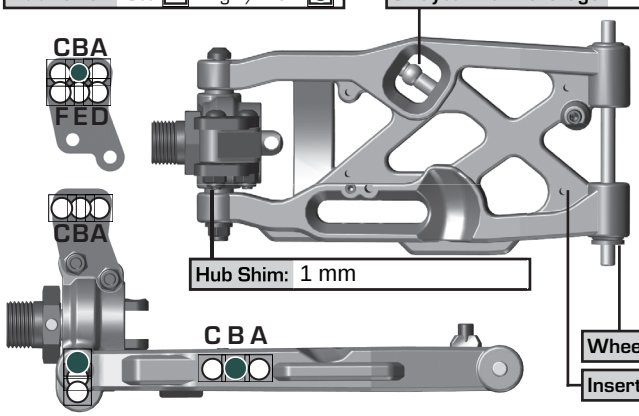

- **Hub Shim:** 1 mm
- **Wheelbase Shim:** 1 mm
- **Insert:** None

Arm Mount C: | Arm Mount D:

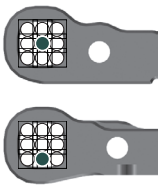

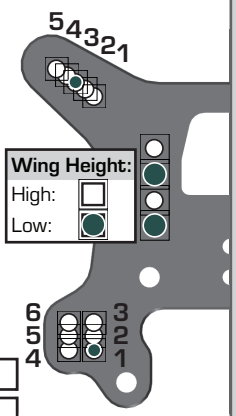

Electronics and Engine:

- **Radio:** Sanwa/Airtronics | **Receiver:**
- **Throttle Servo:** Reedy | Speed:
- **Steering Servo:** Reedy | Speed:
- **EPA:** Throttle: | Brake: | Steering:
- **EXPO:** Throttle: | Brake: | Steering:
- **Brake Bias:** | **D/R:**
- **Receiver Battery:**
- **Engine:** OS | **Temp:**
- **Pipe:** 75/2109 | **Fuel:** NitroPro
- **Restrictor:** | **Glow Plug:** P3
- **Chassis Layout:** FWB ☐ RWB ◉
- **Notes:**

Differential:

	Front	Center	Rear
Fluid:	7,000	7,000	6,000
Gears:	High traction	High traction	High traction
Mass:			

- **Notes:**

Clutch and Gearing:

- **Spur Gear:** 47 | **Bell:** 13
- **Shoes:** 2 composite, 2 aluminum
- **Springs:** 2 green, 2 gold
- **Notes:**

Shocks:

	Front	Rear
Piston:	4x1.4+1x1.5	3x1.5+2x1.6
Fluid:	45 wt	40 wt
Bladder:	Emulsion	Emulsion
Rebound:	0 %	0 %
Spring:	5.1lb White	3.9lb Black
Length:	101 mm	125 mm
Eyelet:	+2 mm	+4 mm

Schelle Pistons



Track Info:

- **Size:** Medium
- **Surface:** Outdoor clay
- **Traction:** Low
- **Moisture:** Dry
- **Condition:** Medium
- **Temperature:** 18C/65F
- **Notes:**

Tires:

- **Front Tires:** JCONCEPTS Relapse
- **Front Compound:** Blue/soft
- **Front Insert:**
- **Rear Tires:** JCONCEPTS Relapse
- **Rear Compound:** Blue/ soft
- **Rear Insert:**
- **Wheel (F/R):** JCONCEPTS Bullet wheels
- **Notes:**

Body, Weight:

- **Body:** B4 Mu
- **Nose Cone:**
- **Rear Wing:** JC Razor
- **Wing Angle:** 0° ☐ 2° ◉ 4° ☐
- **Wing Buttons:** Flat ☐ Fin ☐
- **Vent Holes:**
- **Total Weight:**
- **Notes:**

Radio Tray Flex Assembly:

- **Transponder Mount:** ◉ | **None:** ☐
- **Radio Tray Brace:** ◉

Vehicle Comments: