RC10 B7 TEAM KIT RC10 B7D TEAM KIT

Driver: Sebbe Lindqvist Event: Qualify: Main:

Date: June 19, 2024 Track: Falun Finish: Best Lap Time:

Front Suspension:

Setup: Falun 20240615

Open in So D

Ride Height:	19 mm
Camber:	-0.5 deg
Toe:	0 deg
Anti-Roll Bar:	0 mm
Arm Type:	Standard
Tower Type:	Standard
Wheel Hex:	4 mm
Steering Block KPI:	2
Caster Block Insert:	0 ☐ +2.5 ● +5 ☐
Bulkhead Type:	0 deg aluminum
Kick-Up Angle:	-2.5 ☐ 0 ● +2.5 ☐
Steering Stop Spacing:	0 mm
Caster Block Spacing:	Fwd ● Back ☐

Ball Stud Spacing: 1

Ball Stud Spacing: 2

Bump Steer Spacing: 0

Steering Plate: +1mm

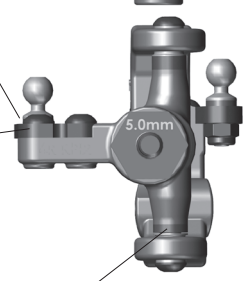

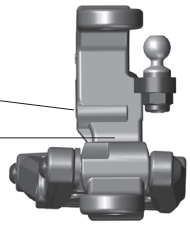

Axle Height:

+3	●
+2	☐
+1	☐
+0	☐

Steering Bellcrank Position: Up ● Down ☐

More: sodialed.com/setups

Ball Stud Spacing: 1

Ball Stud Spacing: 1

Ball Stud Spacing: 2

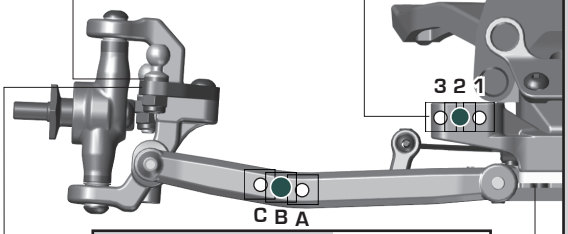

Caster Block Link Mount: +0

Front Bulkhead Spacing: 1

Rear Suspension:

Ride Height:	19 mm
Camber:	-2 deg
Anti-Roll Bar:	
Arm Type:	Standard
Tower Type:	Standard
Arm Spacing:	Fwd ☐ Mid ● Back ☐
Wheel Hex:	5 mm
Hub Type:	Carbon
Hub Spacing:	Fwd ☐ Mid ● Back ☐
Drive Shaft:	CVA's ● Universals ☐

C Mount: Standard

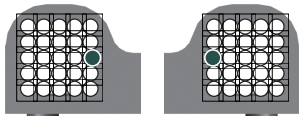

D Mount: Standard

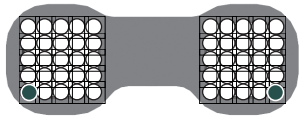

Axle Height:

▼0	3▲	+3
▼1	2▲	+2
▲1	2▼	+1
▲0	3▼	+0

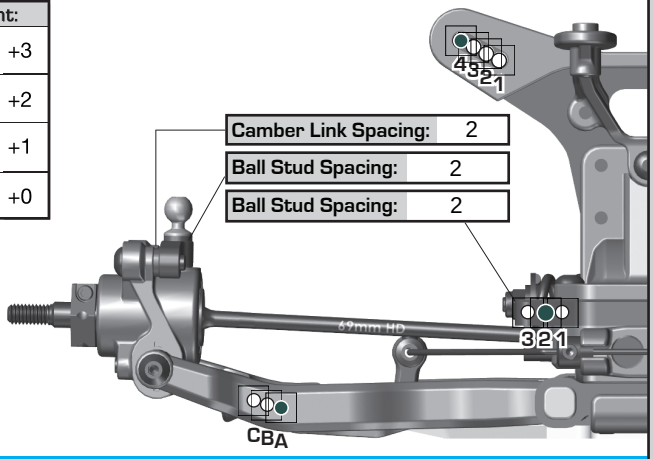

Camber Link Spacing: 2

Ball Stud Spacing: 2

Ball Stud Spacing: 2

Electronics:

Radio:		Servo:	
EPA:	Throttle: %	Brake: %	
ESC:	Reedy		
ESC Settings:			
Motor / Wind:	Reedy 6 T	Timing:	
Pinion:	20	Spur:	78

Battery Mount: Std ● Offset ☐

Back 1 ☐ 2 ☐ 3 ☐ 4 ● 5 ☐ Forward

Battery:	Reedy	Weight:	
Notes:			

Drivetrain:

Differential: Ball Diff: ☐

Height: 1 mm Gear Diff: ●

Diff Setting: 5,000 cst

Notes: 2 drev

Slipper Clutch:

Type:	Slipper
# of Pads:	2 x 19mm FT #92286
Setting:	

Shocks:

	Front	Rear
Piston:	2mm 2x1.7mm holes	2mm 2x1.9
Thickness:		
Fluid:	37.5 wt	27.5 wt
Spring:	3.8lb Yellow	2.2lb Blue
Limiters:	Int: 0 Ext: 0	Int: 0 Ext: 0
Stroke:	24 mm	28 mm
Eyelet:	+2 mm	+4 mm
Cup Offset:	0 ☐ +5 ● +9 ☐	0 ● +5 ☐ +9 ☐



Kashima Bodies: ☐ Chrome Shafts: ☐ Machined Spacers: ☐

Notes: Machined bushings FT #91494 X-Rings FT #91493 Grey springs had been…

Track Info:

Size:	Tight
Surface:	Outdoor astroturf
Traction:	Low
Moisture:	Dry
Condition:	Medium
Temperature:	
Notes:	

Tires:

Front Tires:	Schumacher Cut Stagger Low profile
Front Compound:	Yellow
Front Insert:	None
Rear Tires:	Schumacher Mezzo
Rear Compound:	Yellow
Rear Insert:	Schumacher CAT
Wheel (F/R):	Associated Associated
Notes:	

Body, Weight:

Body:	B7
Front Wing:	B7
Rear Wing:	B7 7"
Wing Angle:	0° ☐ 3° ☐ 6° ●
Chassis Length:	B7 +0mm
Servo Weights:	
Electronic Weights:	11g Aluminum
Total Vehicle Weight:	

Vehicle Comments:

:: For more setups, visit https://www.associatedelectrics.com/teamassociated/manuals_and_setup_sheets/