XPRESS EXECUTE XQ11 SET-UP SHEET

Setup: My Base Setup (Low Grip Asphalt)
Open in So Dialed App
More: sodialed.com/setups

Driver	Faris Haiqal	**Track Surface**	Outdoor asphalt	**Track Temperature**	55C/131F		
Date	June 17, 2024	**Track Traction**	Low	**Result**		**Air Temperature**	38C/100F
Track		**Country**		**Best Lap**		**Humidity**	Dry	**Remark**	

Front

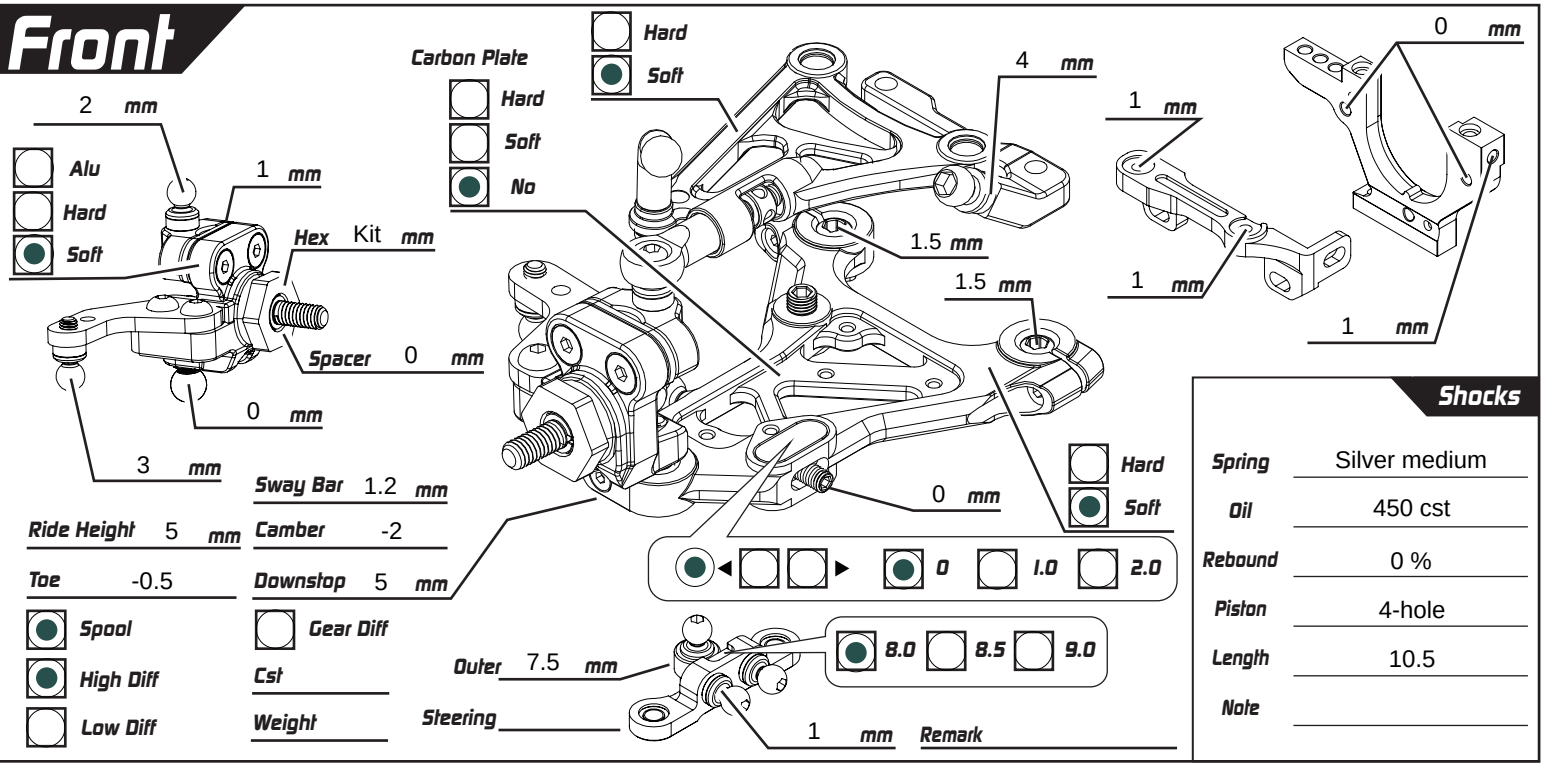

Sway Bar 1.2 mm
Ride Height 5 mm
Camber -2
Toe -0.5
Downstop 5 mm
Spool
Gear Diff
High Diff
Csf
Low Diff
Weight
Outer 7.5 mm
Steering
Remark

Shocks

Spring	Silver medium
Oil	450 cst
Rebound	0 %
Piston	4-hole
Length	10.5
Note	

Rear

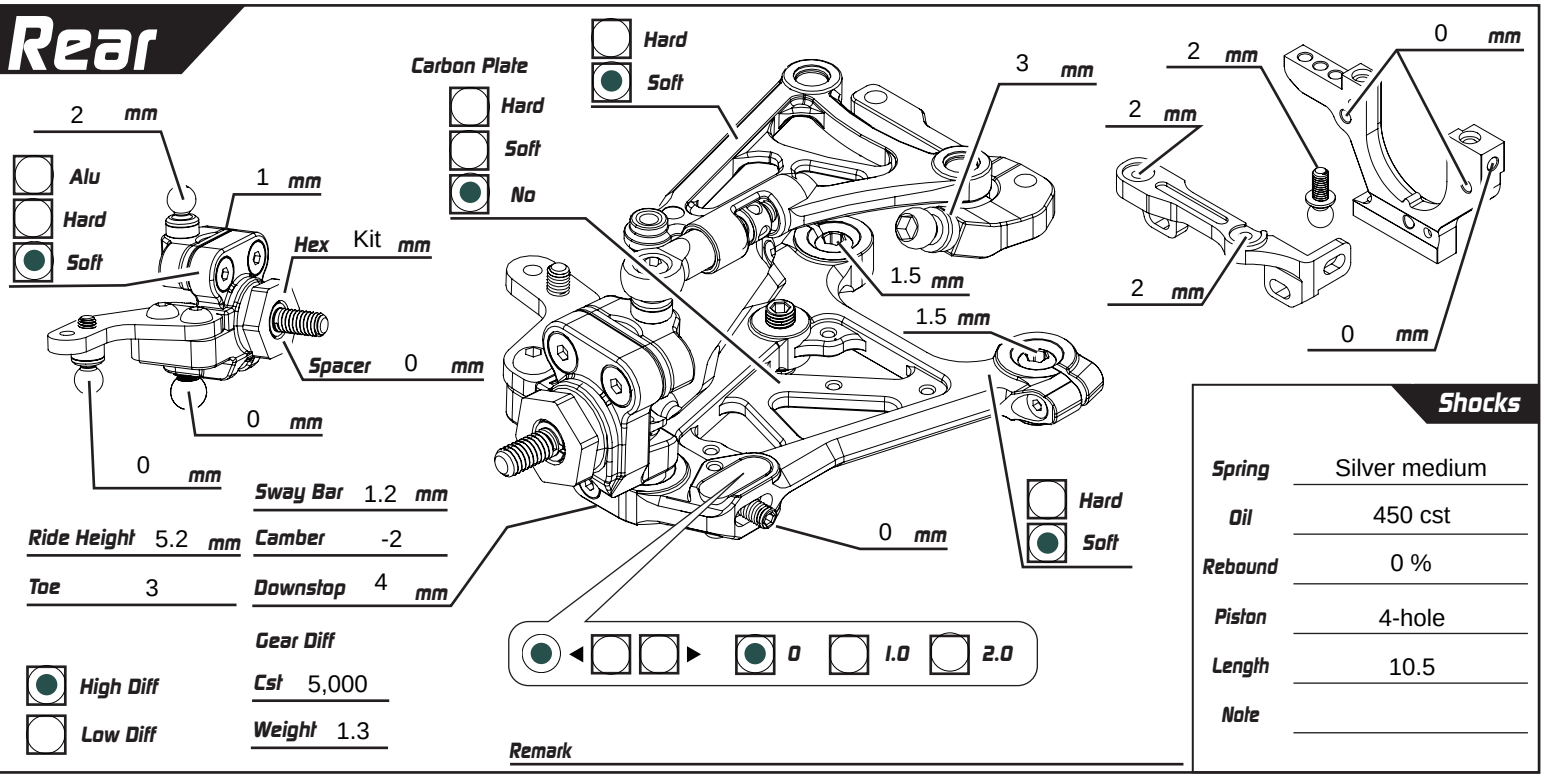

Sway Bar 1.2 mm
Ride Height 5.2 mm
Camber -2
Toe 3
Downstop 4 mm
Gear Diff
High Diff
Csf 5,000
Low Diff
Weight 1.3
Remark

Shocks

Spring	Silver medium
Oil	450 cst
Rebound	0 %
Piston	4-hole
Length	10.5
Note	

Weight g

Battery ORCA
Body
Weight g
MR33 V3 Asphalt
Tires Xpress 40X V5
Additive
Carbon
Alu
Servo Horn Height mm
ESC ORCA
Motor
Spur 64 P/ 110 T
Servo
Weight g
Pinon P/ 37 T
FDR
Weight g

