TEKNO RC — Setup Sheet — EB48 2.1

Open in So Dialed App

Setup: My Base Setup

Name: Steve Marcil **Date:** September 7, 2024 **Event:**

Track: INDOOR ○ OUTDOOR ○ **Size:** Medium **Traction:** Low/Medium

Surface: Bumpy/Rutted **Type:** Outdoor loose/loamy ACKED ○ BLUE GROOVE ○ CLAY ○ ASTRO ○

More: sodialed.com/setups

Condition: Dry/Dusty

Ackerman/Bumpsteer/Arm Plate/Spindle Height/Servo Saver







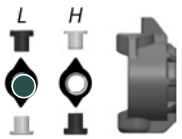



FULL TURNS FROM FULLY TIGHT

Front End:

Arms: TKR9286B

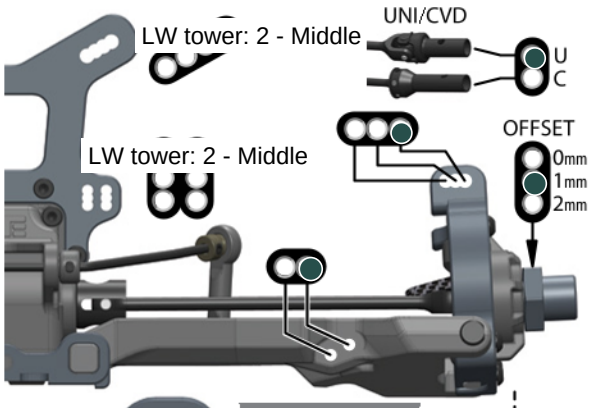

Suspension:

RIDE HEIGHT:	25 mm	CAMBER:	-3
CASTER BLOCK:	21 deg	SWEEP:	0
KICK UP:	11	TOE:	-1
SWAY BAR:	2.2mm	DROOP:	116 mm

Shocks:

OIL:	550 cst	BRAND:	Ultimate Racing
PISTON:	Tapered 3x1.3/3x1.6mm	SPRING:	83mm 3.48lb Green
REBOUND:	0 %	BUILD:	Emulsion



"A" Block:

TKR9161 (0mm)

TKR9161B (-1mm)

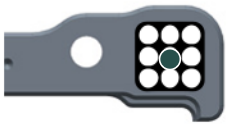

"B" Block:

TKR9162 (0mm)

TKR9162B (-1mm)

Rear End:

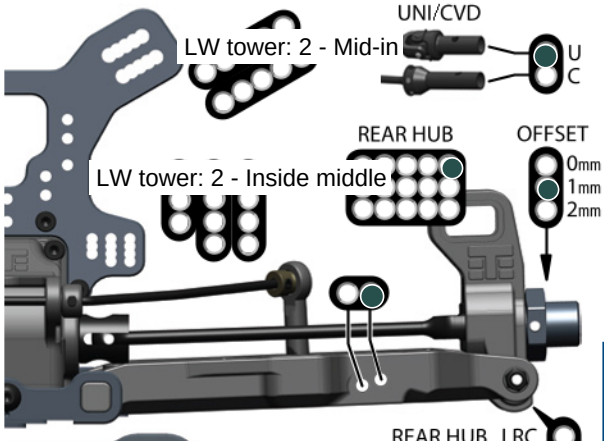

Suspension:

RIDE HEIGHT:	27 mm	CAMBER:	-3
ANTI-SQUAT:	1	TOE:	4
SWAY BAR:	2.4mm	DROOP:	126 mm

Shocks:

OIL:	500 cst	BRAND:	
PISTON:	Tapered 3x1.2/3x1.6mm	SPRING:	83mm 3.59lb Yellow
REBOUND:	0 %	BUILD:	Emulsion

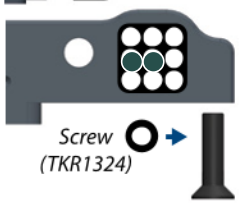

Screw (TKR1324)

"C" Block:

TKR9163B (-1mm)

TKR9163C (-2mm)

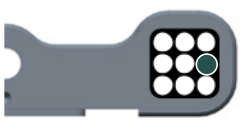

"D" Block:

TKR9164B (-1mm)

TKR9164C (-2mm)

Wheelbase:

F/R: 0/3 mm

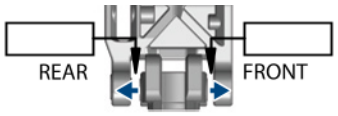

(Shims)
(Thick - 2mm)
(Thin - 1mm)

Chassis Braces:

REAR-SHORT: ○

Tires / Wheels:

BRAND / TREAD:

COMPOUND:

INSERT:

WHEEL:

NOTES:

Body / Wing:

BODY MAKE: KC S15

WING MAKE: Kit

WING MOUNT POSITION:

0mm: ○ +7mm: ● +12mm: ○

NOTES:

Differentials:

OPTION		FRONT	CENTER	REAR
Diff Oil — Brand: Ultimate Racing		5,000	6,000	4,000
(TKR5144B)		●	●	●
(TKR5144)		○	○	○
(TKR5145B)		●	●	●
(TKR9145)		○	○	○
Standard (TKR9114-TKR9112)		●	●	●
Lightened (TKR5114XB-TKR5112x)		○	○	○
(TKR9150)		○	○	○
(TKR9150B)		●	●	●
(TKR9115)		○	○	○
(TKR9115B)		●	●	●
(TKR9149)		●	●	●
(TKR9149A)		○	○	○

Drivetrain:

PINION / SPUR: 16 / 44 (teeth)

Equipment:

ESC:	Hobbywing	XR8 Pro G3
BATTERY:	ProTek	6400 mAh
MOTOR:		
SERVO:	Nitro Pro	

Notes: