MTC2R SETUP SHEET

NAME:	Patrick Eisenmenger	**DATE:**	August 31, 2024
TRACK:	VfR Rüsselsheim Asphalt	**RACE:**	Training, sugared
TRACK SURFACE:	Outdoor asphalt		
LAYOUT:	Medium		
TRACTION:	Medium/High		

ELECTRONICS

SERVO:	SRT	**ESC:**	Hobbywing
BATTERY:	Intellect Pioneering	**MOTOR:**	Reedy 5.5 t 26 deg

NOTES:

TIRES

BRAND/TYPE F/R:	Matrix	Matrix
ADDITIVE F/R:	Mr33 v3	Mr33 v3
ADDITIVE TIMING F/R:	20 min	20 min
WARMER° F/R:	75	75

TRANSMISSION

PINION:	30	**SPUR:**	108

A2248D(Alu): ☐

DIFF OIL CST:	5,000
OIL WEIGHT (quty.):	1.5 g

BELT TENSION: 

FRONT: 1 2 ● 4 5 6 7 **REAR:** 1 2 ● 4 5 6 7

SHOCK´S

FRONT:		**REAR:**
Standard	**SHOCK CASE:**	Standard
4 x 1.3mm	**PISTON:**	4 x 1.3mm
47.5 wt g	**OIL:**	47.5 wt
6.25T	**SPRING:**	6T
9.2 mm	**LENGTH:**	9.2 mm

ANTI ROLL BAR

FRONT:	**REAR:**
None mm	None mm

OPTIONAL WEIGHT

A2423	A2424	A2425	A2704	A2705
☐	☐	☐	●	●

BODYSHELL

TYPE:	Twister Speciale 0,5mm	**WING TYPE:**	
WING POS:	10mm over rear	**OVERALL WEIGHT:**	

STIFFENER: ☐

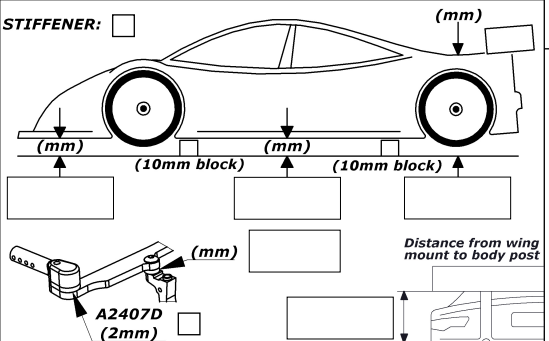

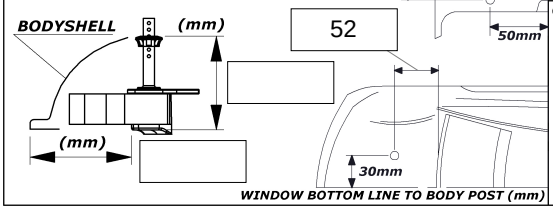

FRONT SUSPENSION

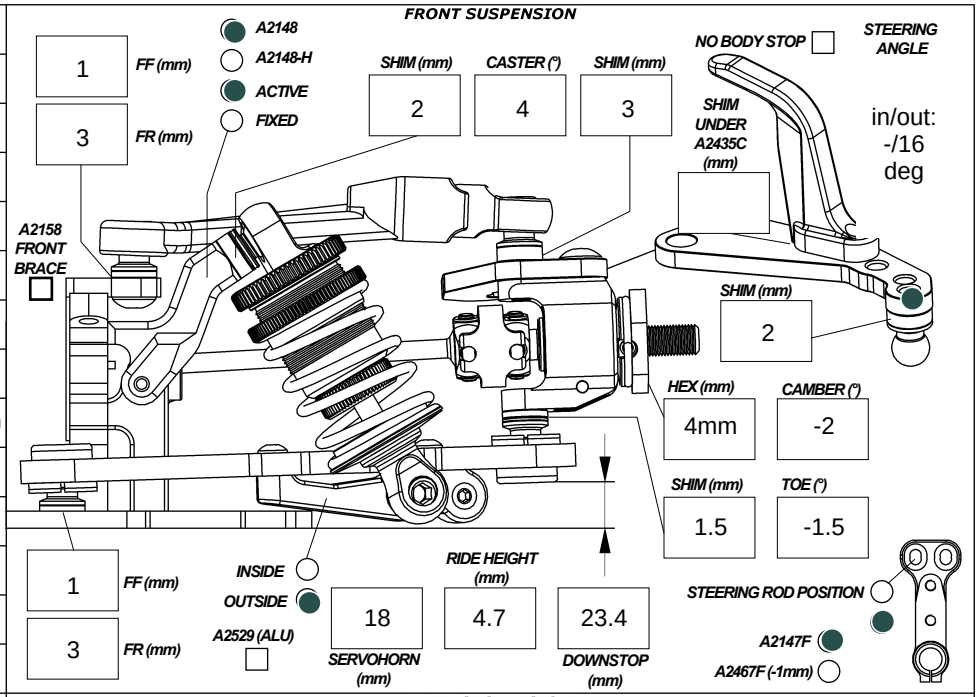

REAR SUSPENSION

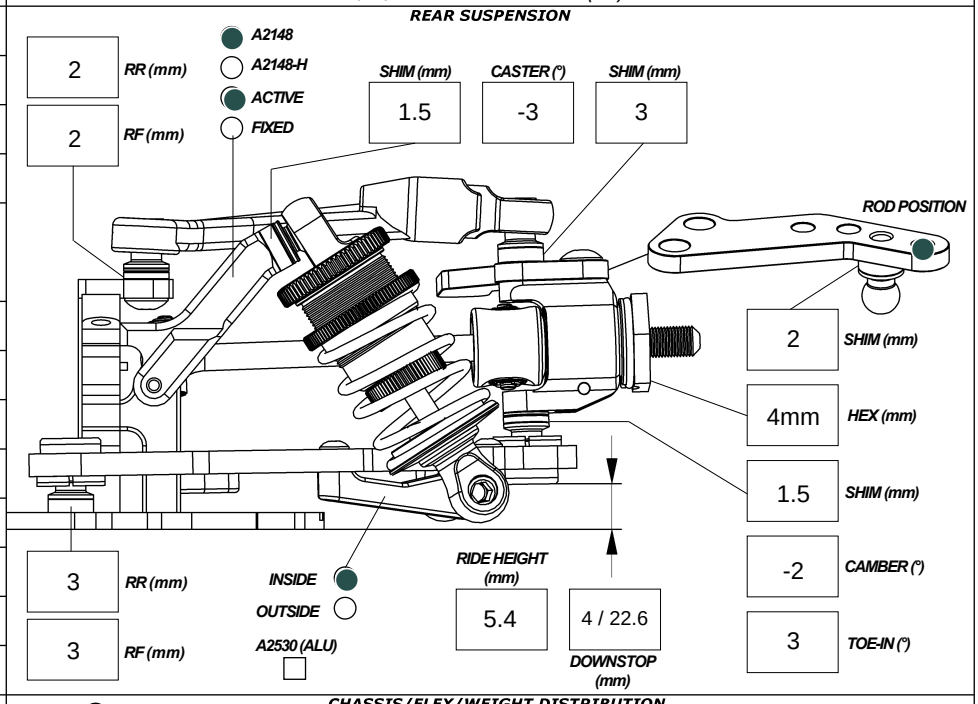

CHASSIS/FLEX/WEIGHT DISTRIBUTION

A2414: ○ RC Maker Slimflex 2,2mm
A2415: ○
A2434: ○

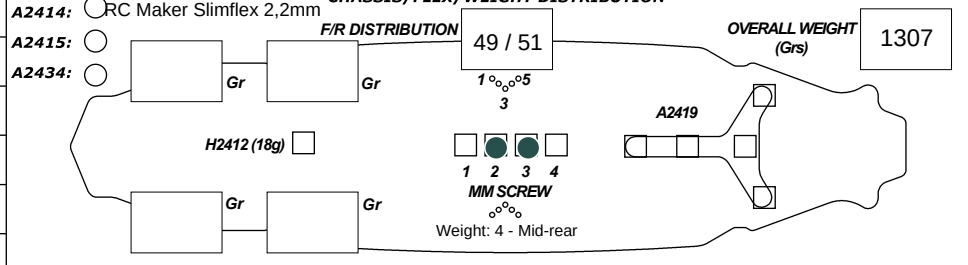

UPPERDECK SETTING

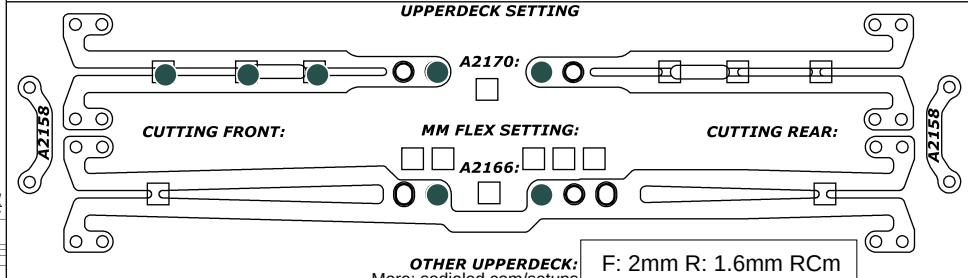

OTHER UPPERDECK: F: 2mm R: 1.6mm RCm

More: sodialed.com/setups

Setup: VfR Rüsselsheim

Open in So Dialed App