XPRESS EXECUTE XQ11 SET-UP SHEET

Setup: My Base Setup
Open in So Dialed App
More: sodialed.com/setups

Driver	Hyunsseok Jang	**Track Surface**	Indoor asphalt			**Track Temperature**	
Date	February 1, 2025	**Track Traction**	High	**Result**		**Air Temperature**	
Track	GRC	**Country**		**Best Lap**	11.6	**Humidity**	**Remark**

Front

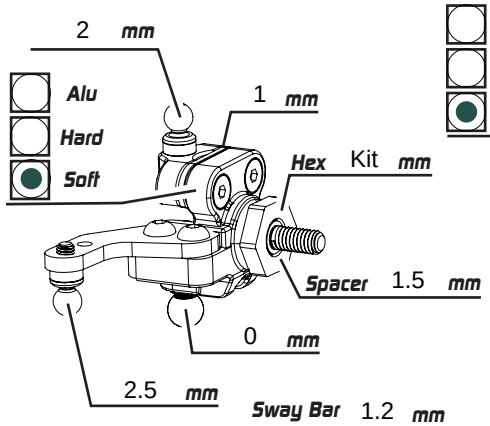

Alu / Hard / Soft

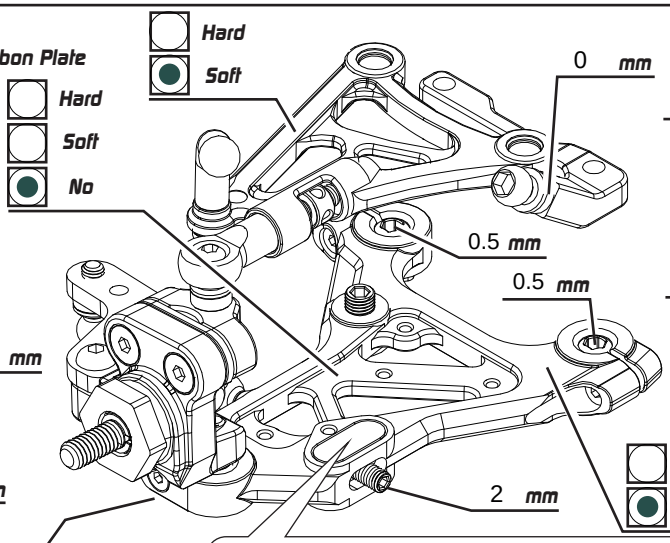

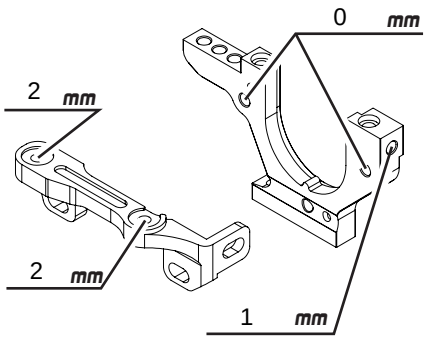

Sway Bar	1.2 mm	**Ride Height**	3.8 mm
Camber	-2	**Toe**	-1
Downstop	6.4 mm		
Gear Diff		**Spool**	
Csf		**High Diff**	
Weight		**Low Diff**	

Shocks

Spring	2.4
Oil	35 wt
Rebound	0 %
Piston	4-hole
Length	10.5
Note	

Rear

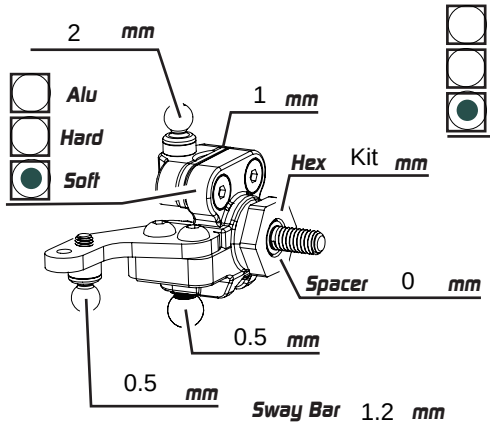

Alu / Hard / Soft

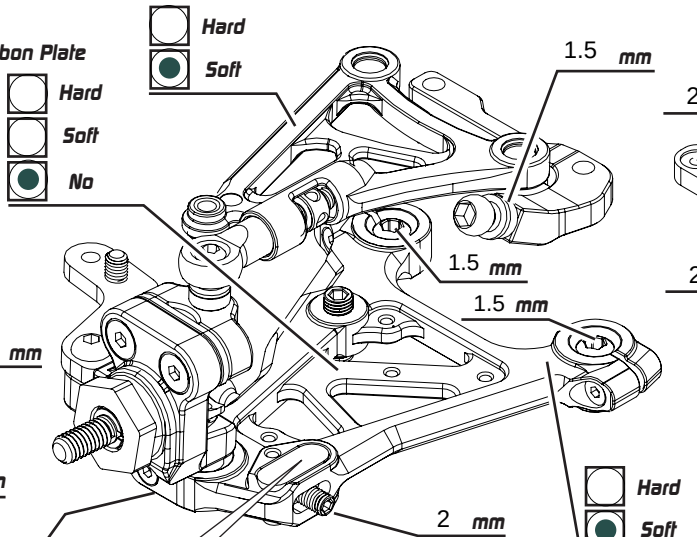

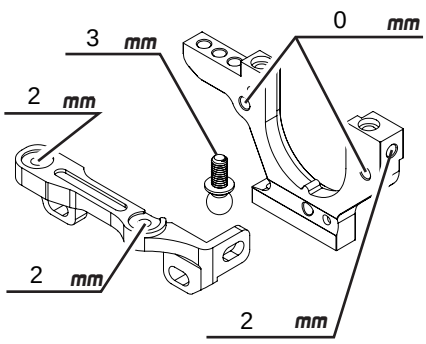

Sway Bar	1.2 mm	**Ride Height**	4.8 mm
Camber	-2	**Toe**	2.5
Downstop	5.4 mm		
Gear Diff		**High Diff**	
Csf	5,000	**Low Diff**	
Weight	1.3		

Shocks

Spring	2.7
Oil	40 wt
Rebound	0 %
Piston	4-hole
Length	10.5
Note	

Weight	g	**Battery**	NOSRAM
Body	??	**Tires**	Sweep GT
Additive	???	**Servo Horn Height**	18.5 mm
ESC	Rocket	**Motor**	Rocket
Spur	64 **P/** 110 **T**	**Servo**	
Pinon	**P/** 35 **T**	**FDR**	5.97
Weight	g	**Weight**	g
Carbon		**Alu**	
Weight	g		

