RC10 B74.2 TEAM KIT

Setup: Fivedays Stock

Driver: Marco Steinbuechel | **Event:** Langenfeld Fivedays #3
Date: February 6, 2025 | **Track:** Fivedays indoor
Qualify: | **TQ:** ☐ | **Main:** | **Finish:** 3 | **Best Lap Time:** 14.2

Front Suspension:

Open in So Dialed App

Ride Height:	14 mm
Camber:	-1.5 degrees
Toe:	-1 degrees
Anti-Roll Bar:	2.0mm
Arm Type:	Gullwing Carbon
Tower Type:	RD Heavy Duty
Wheelbase Shim:	1 mm
Wheel Hex:	5mm
Caster Block:	8 ° ☐ 9 ° ● 10 ° ☐
Chassis Brace Support:	Plastic & fiberglass
Top Plate Brace:	Carbon
Front Axles:	CVA ● DCV ☐
Notes:	



Front Chassis Brace Screws: 1 2

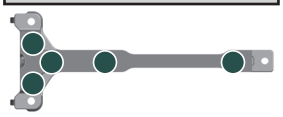



Ball Stud Spacing: 1 mm

Arm Mount A: 1 ° ☐ 0 .5° ☐ Gray ☐ Black ☐

Arm Mount B: 1 ° ☐ 0 .5° ☐ Gray ☐ Black ☐



Diff Height: +2 ● +0 ☐



Axle Height: More: sodialed.com/setups
+3 ☐ +2 ● +1 ☐ 0 ☐

Ball Stud Spacing: 0 mm

Steering Plate: +2

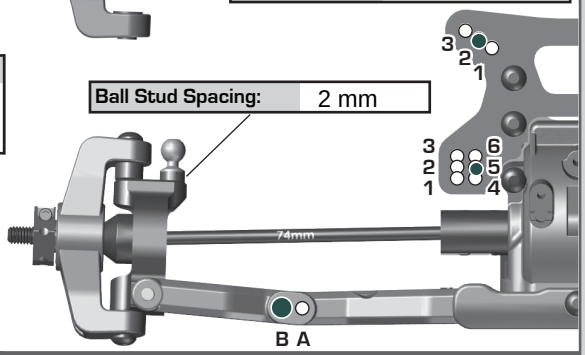

Rear Suspension:

Ride Height:	14 mm
Camber:	-1.5 degrees
Anti-Roll Bar:	1.8mm
Arm Type:	Carbon
Wheelbase Shim:	Long (arm back)
Wheel Hex:	8mm Serpent
Chassis Brace Support:	Plastic & fiberglass
Hub Spacing:	Fwd ☐ Mid ● Back ☐
Notes:	

Rear Chassis Brace Screws:

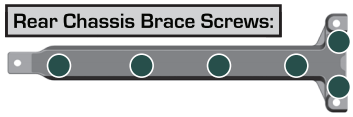

Arm Mount C: 1 ° ● 0 .5° ☐ Gray ☐ Black ☐

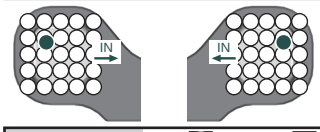

Arm Mount D: 1 ° ● 0 .5° ☐ Gray ☐ Black ☐

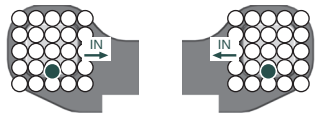

Diff Height: +3 ☐ +2 ● +1 ☐ +0 ☐

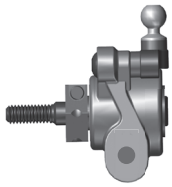

Axle Height:

▼0 3▲	+3	
▼1 2▲	+2	●
▲1 2▼	+1	
▲0 3▼	+0	

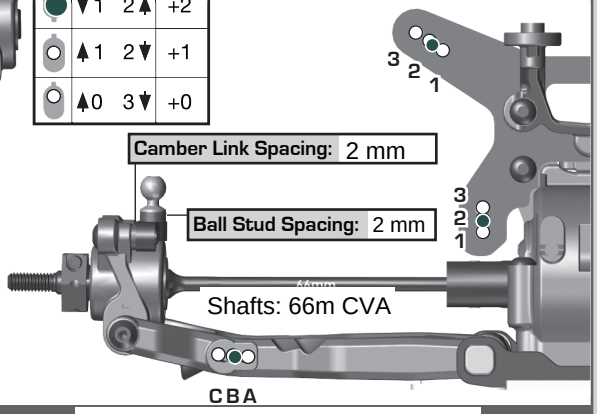

Electronics:

Radio:	
Servo:	AGFRC
EPA:	Throttle: % Brake: %
ESC:	Hobbywing XR10 Pro G2S
	Settings: Blinky
Motor:	Ruddog RP542 10.5
Timing:	
Pinion:	24
Spur:	78
Battery:	Intellect Pioneering MC3 HV Shorty 5200 mAh
Battery Position:	Back 1 ☐ 2 ☐ 3 ☐ 4 ● Forward
Battery Weight:	

Differential:

	Front	Center	Rear
Fluid:		None	
Gears:	Metal	N/A	Metal
Type:	LTC	None	LTC
Notes:		30,000	15,000

Slipper Clutch:

Type:	
# of Pads:	
Setting:	3.2

Shocks:

Oil: Hudy

	Front	Rear
Piston:	RD 2x1.6 + 2x1.2	RD 2x1.7 + 2x1.3
Thickness:		
Fluid:	700 cst	600 cst
Spring:	4.3lb Orange	2.2lb Blue
Limiters:	1 / 2 mm int/ext	0 / 3 mm int/ext
Stroke:	24 mm	25.5 mm
Eyelet Length:	+2 mm	+0 mm
Cup Offset:	5 mm	0 mm
Notes:		



Track Info:

Size:	Tight
Surface:	Dirt ☐ Carpet ☐ Astroturf ☐ Multi Surface ☐
Traction:	High/High/High
Moisture:	Dry/Dry/Dry
Condition:	Smooth
Temperature:	Ambient: 20C/68F Track: 20C/68F
Notes:	

Tires:

Front Tires:	Shard
Front Compound:	Yellow
Front Insert:	Schum. med
Rear Tires:	Azami
Rear Compound:	Yellow
Rear Insert:	Schum. med Tuby
Wheel (F/R):	F: Ruddog
Notes:	Prep: Sidewall glued to mid of wedges

Body, Wing, Weight:

Body:	JConcepts S2 lightweight
Front Wing:	Yes ☐ No ☐
Rear Wing:	JC Carpet 6.5"
Wing Angle:	0° ● 6° ☐
Wing Mount Height:	0 ☐ -2 ●
Servo Weights:	
Electronic Weights:	R: Ruddog
Total Vehicle Weight:	1738 g

Vehicle Comments: