SET UP SHEET

CATL1R PURE BEAST

Open in So Dialed App
More: sodialed.com/setups

Driver: Craig Harris | February 28, 2025 | **Event/Track:** Club | Caldicot RC Raceway

Setup: Cobra WRCA 2025 Starting Setup | **Final:** | **Best Lap:**

TRACK TYPE

Grip Level	Medium
Layout: Tight	
Surface: Smooth	
Type: Indoor carpet Moisture: Dry	
Weather	

TYRES

	FRONT	REAR
Tyres	Schumacher U6907 Shard	Schumacher U6838 Cactus
Wheels	Schumacher	Schumacher
Inserts	U6733	Cragg Blue

Notes:

Notes: Medium glue up to treadblocks

Notes:

Rear: Evo rear hangers LD3m U/Js G hub inserts

FRONT SUSPENSION

KEY: **P** = Plastic, **A** = Alloy, **B** = Brass, **CF** = Carbon Fibre, **S2** = Schumacher Composite, **M** = Medium, **S** = Stiff, **Sh** = Short, **H** = High, **L** = Low, **F** = Front, **R** = Rear, **Y** = Yes, **N** = No

Ride Height	13 mm
Wheelbase	Long ● Short ☐
Toe	-1.5 degrees
Camber at Ride Height	-1 deg
Anti Roll Bar	None ☐ 1.2 ☐ 1.4 ☐ 1.6 ☐ 1.8 ☐ 1.9 ☐ 2.0 ● 2.1 ☐
Hub Height	H ● L ☐
Bump Steer Washers	1 mm
Hingepin Height	H ● L ☐
Driveshaft Type	Roche ● U/J ☐
Steering Arm	Recon

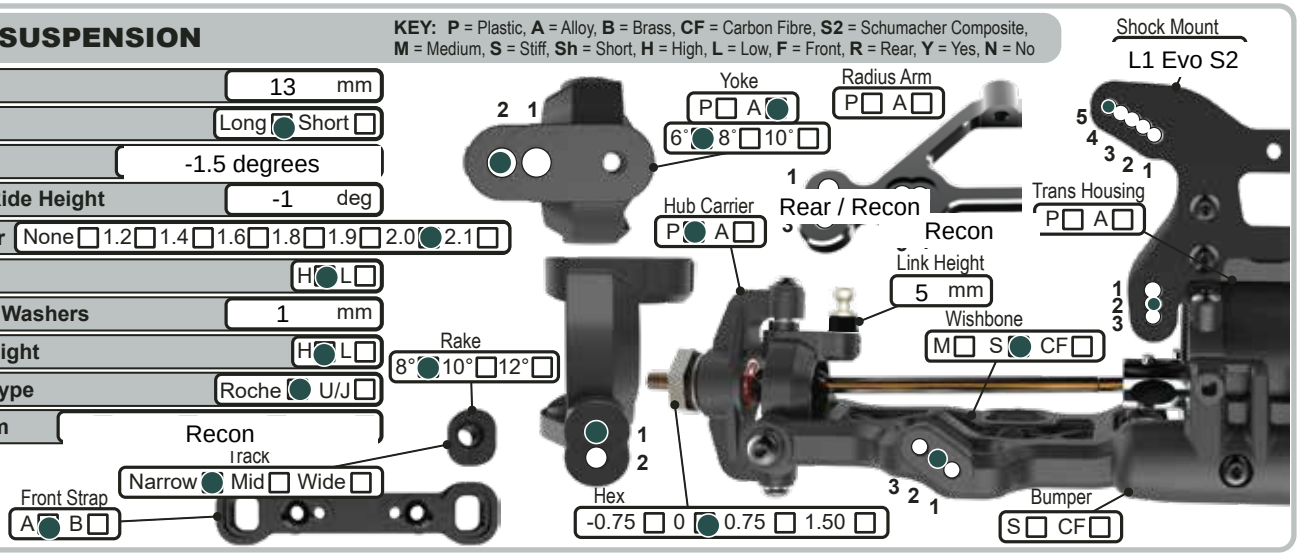

REAR SUSPENSION

KEY: **P** = Plastic, **A** = Alloy, **B** = Brass, **CF** = Carbon Fibre, **S2** = Schumacher Composite, **M** = Medium, **S** = Stiff, **Sh** = Short, **H** = High, **L** = Low, **F** = Front, **R** = Rear, **Y** = Yes, **N** = No

Ride Height	13 mm
Wheelbase	Sh ☐ M ☐ L ●
Anti-Squat	1° ☐ 2° ● 3° ☐ 4° ☐
Toe	4° ☐ 3.5° ☐ 3° ☐ 2.5° ☐ 2° ☐ 1.5° ☐ 1.0° ● 0.5° ☐
Camber at Ride Height	-1.5 deg
Anti Roll Bar	None ☐ 1.2 ☐ 1.4 ☐ 1.6 ☐ 1.8 ☐ 1.9 ☐ 2.0 ● 2.1 ☐
Wing Gurney Height	0 mm
Driveshaft Type	LD3M u/j

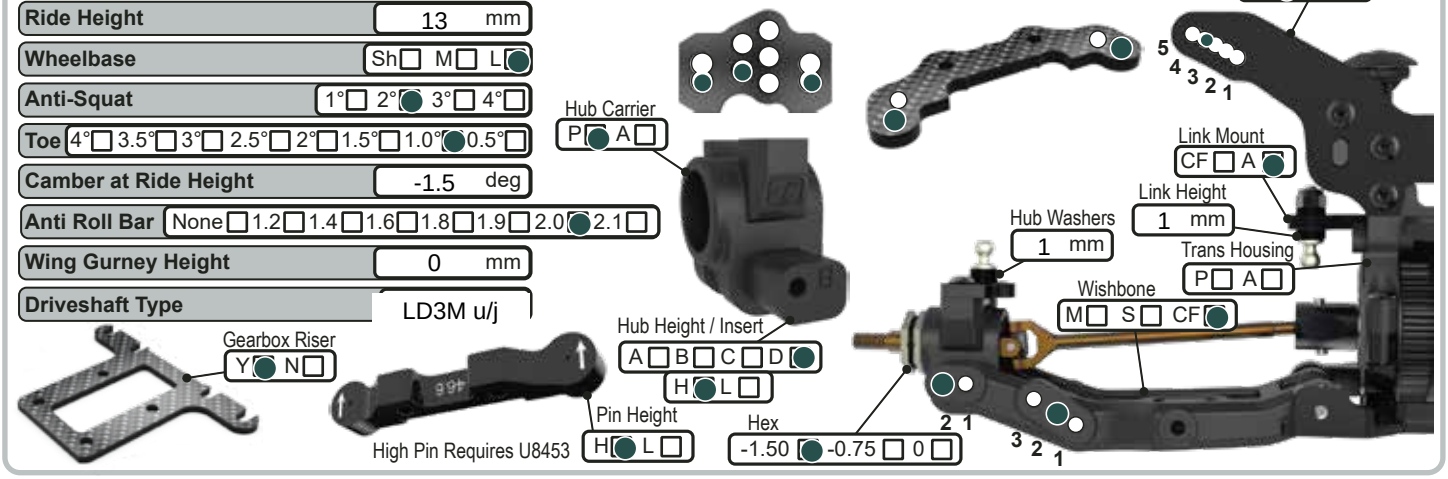

CHASSIS

Chassis	A ● C/F ☐
LiPo Position	R ☐ F ●
Running Weight	g
Front Topdeck	S2 ● CF ☐

WEIGHTS

Radio Tray	Y ☐ N ☐
ESC Tray	Y ☐ N ☐

Pinion	19 t
Spur	83 t
R.O.S	Y ☐ N ●
Lock Out	Y ☐ N ●
Slipper Plates	2 ● 3 ☐

Motor	SKYRC
Motor wind: 5.5 T	
Timing	30 deg

EQUIPMENT

E.S.C.	Hobbywing
Servo	AGFRC
RX	Sanwa/Airtronics
LiPo	Intellect Pioneering
Bodyshell	L1 Aerox
Wing	Penguin King 1mm

TRANSMISSION

Diff Height Front	H ☐ M ☐ L ●	Diff Height Rear	H ● M ☐ L ☐
Diff Oil Front	12,000 cSt	Diff Oil Rear	12,000 cSt
Diff Gears Front	2 ☐ 4 ●	Diff Gears Rear	2 ☐ 4 ●
Diff Body Front	P ☐ A ☐ CF ●	Diff Body Rear	P ☐ A ☐ CF ●

SHOCKS

KEY: **i** = Internal, **e** = External, **V** = Vented, **S** = Sealed, **A** = Aeration

	FRONT	REAR
Cap	V ☐ S ☐ A ●	V ☐ S ☐ A ●
Kashima	Y ☐ N ●	Y ☐ N ●
Oil	625cst	450 cst
Piston	VRP 2 x 1.6	VRP 2 x 1.8
Spring	4.0lb Black	2.6lb Black
Limiters (i)	0 mm	0 mm
Stroke	20 mm	28 mm
Limiters (e)	0 mm	2 mm
Shock Stand Off		mm



Notes: Oil: CORE

www.racing-cars.com