RC10 B7 TEAM KIT RC10 B7D TEAM KIT

Driver: Henrik Steen Karlsen Event: Qualify: Main:

Date: April 16, 2025 Track: Hvervenbukta Raceway, Oslo Finish: Best Lap Time:

Setup: Kit Setup B7 Open in So D

Front Suspension:

Ride Height:	17 mm
Camber:	-1 deg
Toe:	0 deg
Anti-Roll Bar:	1.0 mm
Arm Type:	Standard
Tower Type:	Standard
Wheel Hex:	6.5 mm
Steering Block KPI:	2
Caster Block Insert:	0 ☐ +2.5 ● +5 ☐
Bulkhead Type:	0 deg aluminum
Kick-Up Angle:	-2.5 ☐ 0 ● +2.5 ☐
Steering Stop Spacing:	0 mm
Caster Block Spacing:	Fwd ● Back ☐

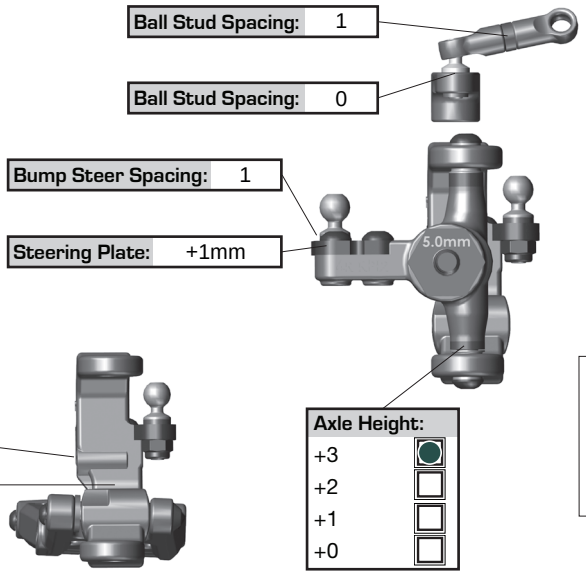

Axle Height:

+3	●
+2	☐
+1	☐
+0	☐

Steering Bellcrank Position: Up ● Down ☐

More: sodialed.com/setups

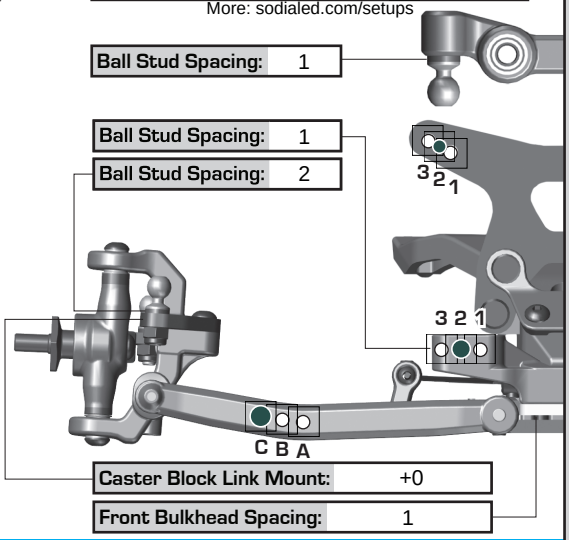

Caster Block Link Mount: +0

Front Bulkhead Spacing: 1

Rear Suspension:

Ride Height:	17 mm
Camber:	-1 deg
Anti-Roll Bar:	1.2 mm
Arm Type:	Standard
Tower Type:	Standard
Arm Spacing:	Fwd ☐ Mid ● Back ☐
Wheel Hex:	5 mm
Hub Type:	Standard
Hub Spacing:	Fwd ☐ Mid ● Back ☐
Drive Shaft:	CVA's ● Universals ☐

C Mount: Standard

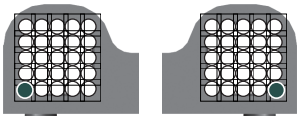

D Mount: Standard

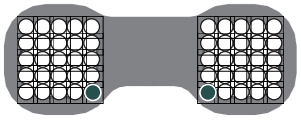

Axle Height:

▼0	3▲	+3
▼1	2▲	+2
▲1	2▼	+1
▲0	3▼	+0

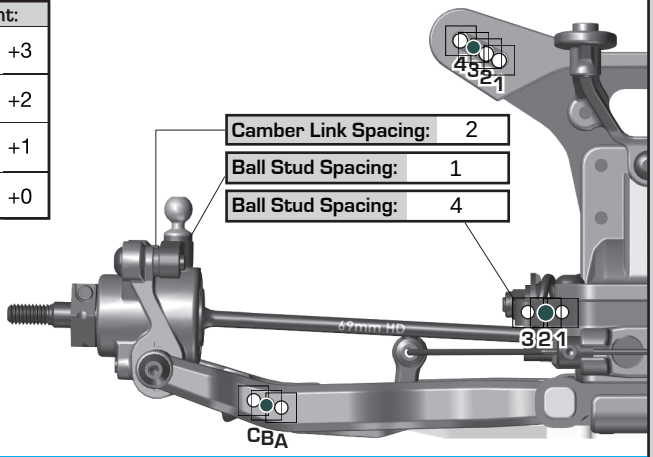

Electronics:

Radio:	Flysky	Servo:	Power HD
EPA:	Throttle: %	Brake:	%
ESC:	Hobbywing		
ESC Settings:			
Motor / Wind:	Hobbywing 6.5 T	Timing:	
Pinion:	20	Spur:	78

Battery Mount: Std ● Offset ☐

Back 1 ☐ 2 ☐ 3 ● 4 ☐ 5 ☐ Forward

Battery:	Gens Ace	Weight:	

Notes:

Drivetrain:

Differential: Ball Diff: ☐

Height: 2 mm Gear Diff: ●

Diff Setting: 30,000 cst

Notes:

Slipper Clutch:

Type:	HD
# of Pads:	2 x 11mm
Setting:	

Shocks:

	Front	Rear
Piston:	2.5mm 2x1.6mm holes	2.5mm 2x1.9mm holes
Thickness:		
Fluid:	35 wt	30 wt
Spring:	4.3lb Orange	2.0lb Gray
Limiters:	Int: 0 Ext: 1	Int: 0 Ext: 2
Stroke:	23.5 mm	27.5 mm
Eyelet:	0 mm	+2 mm
Cup Offset:	0 ☐ +5 ● +9 ☐	0 ● +5 ☐ +9 ☐



Kashima Bodies: ☐ Chrome Shafts: ☐ Machined Spacers: ☐

Notes:

Track Info:

Size:	Medium
Surface:	Outdoor astroturf
Traction:	Medium
Moisture:	Dry
Condition:	Medium
Temperature:	5C/41F
Notes:	

Tires:

Front Tires:	Schumacher Mini Dart
Front Compound:	Yellow
Front Insert:	
Rear Tires:	Schumacher Mini Dart
Rear Compound:	Yellow
Rear Insert:	
Wheel (F/R):	Pre-glued Pre-glued
Notes:	

Body, Weight:

Body:	B7
Front Wing:	B7
Rear Wing:	B7 7"
Wing Angle:	0° ☐ 3° ☐ 6° ●
Chassis Length:	B7 +0mm
Servo Weights:	
Electronic Weights:	11g Aluminum
Total Vehicle Weight:	

Vehicle Comments:

:: For more setups, visit https://www.associatedelectrics.com/teamassociated/manuals_and_setup_sheets/