Name: Wesley Knapp	January 17, 2026	Event: Club Racing	Track: RC Excitement

Track Conditions	Setup: My Base Setup 3/21/25			Open in So Dialed App	
Type: Indoor clay	Surface: Smooth	❑ Blue Groove	❑ Wet	Grip: High/Medium	Other:
Layout: Tight	Moisture: Dry	❑ Dry	❑ Dusty	Air temp: 13C/55F	

Front Suspension

Ride Height	15 mm
Camber	-2 °
Toe	-1 °
Sway Bar	1.5mm

Notes: -2 tower

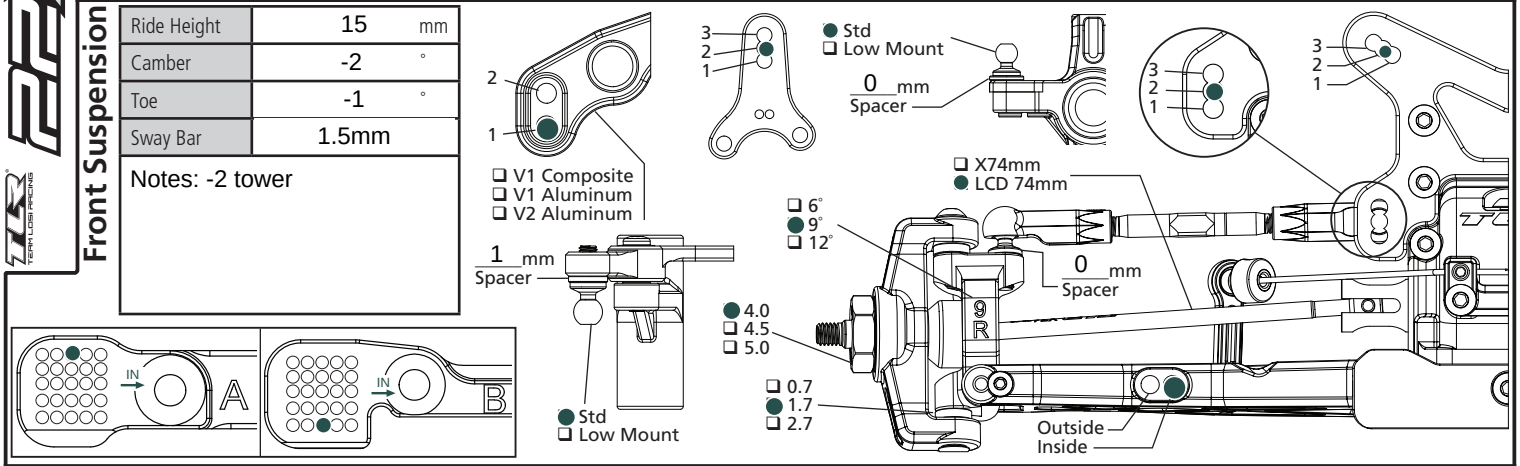

Rear Suspension

Ride Height	15 mm
Camber	-2 °
Sway Bar	1.6mm mm

Notes: _____

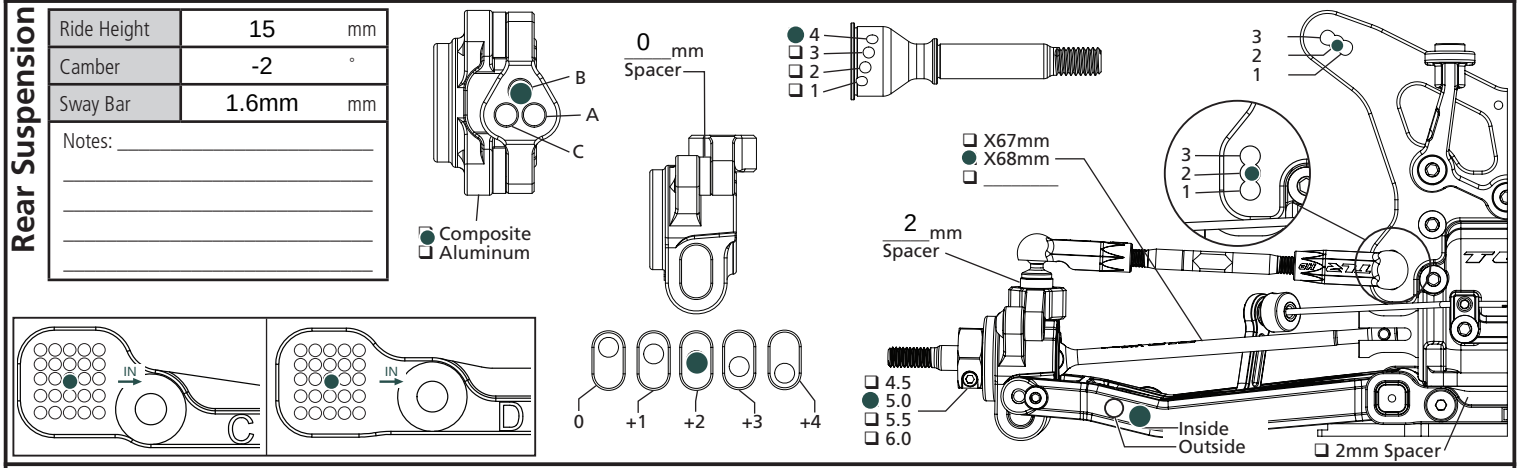

Chassis

Differentials

Fluid brand: Flash Point

	Front	Center	Rear
Fluid	10,000 cst	500,000 cst	6,000 cst
Int Gears	●Stl ❑ Comp	●Stl ❑ Comp	●Stl ❑ Comp
Weight	19.4 g	g	19.4 g
Ring/Pin	❑ Stl ●Comp		❑ Stl ●Comp
Center Diff Cover	●Composite ❑ Aluminum		
Slipper Pads	Differential		

Aerodynamics

Body	Pro-Line Axis LW
Fr Scoop	TLR Scoop
Rr Wing	TLR Medium downforce 6.5"
Wicker	2nd line
Angle	0 °
Notes	

Tires

	Front	Rear
Brand	TZO	TZO
Tread		
Compound	Clay	Clay
Insert	Stock	Stock
Sauce	Pink FDJ	Pink FDJ
Wheel	Jconcepts	Jconcepts
Notes		

Shocks

Oil brand: Flash Point

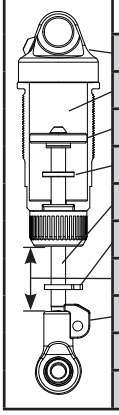

	Front	Rear
Shock Caps	Aluminum G3	Aluminum G3
Oil	425 cst	350 cst
Piston	G3 2 x 1.7mm	G3 2 x 1.8mm
Limiter, Int	Int/ext: 2/0 mm	0/0
Shaft Dia	●3.0mm ❑ 3.5mm	●3.0mm ❑ 3.5mm
Limiter, Ext	mm	mm
Stroke	20.5 mm	29.5 mm
Eyelet	●Std ❑ +2mm	●Std ❑ +2mm
Spring	AE 13mm Orange	TLR 13mm Green
Spring Cup	❑ Low ●Mid ❑ High	●Low ❑ Mid ❑ High

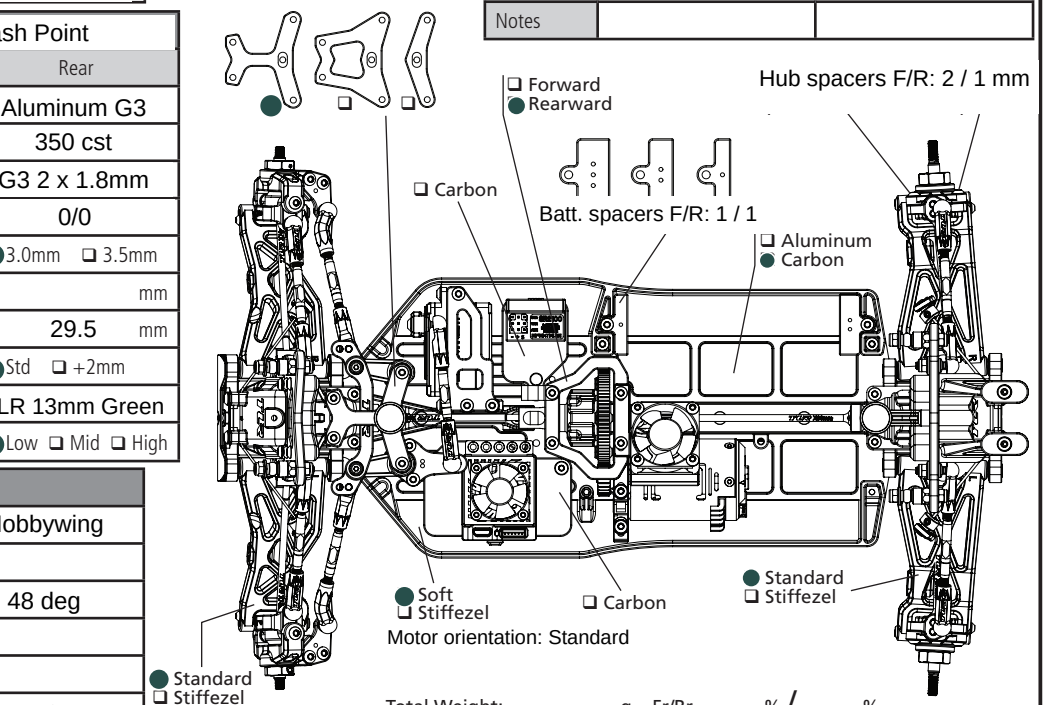

Electronics

Radio	Futaba	ESC	Hobbywing
Servo	ProTek	Thro Prof	
Battery	Trinity	Timing Adv	48 deg
Battery Wt	g	Initial Brake	
Motor	Trinity 13.5 t	Drag Brake	
Gearing	25 / 78	Thr/Bra EPA	100 % /

Total Weight: _____g Fr/Rr _____% / _____%