TC8 FACTORY TEAM GRAPHITE-SPEC | TC8 FACTORY TEAM STEEL-SPEC

Driver: Carbon BlueZZ | Event: Open Practice | Qualify: | Main:

Date: May 3, 2026 | Track: 5280 Raceway | Finish: | Best Lap Time:

Front Suspension:

Open in So Dialed App

RESET

Ride Height: 5.2
Camber: -1
Toe: -1
Anti-Roll Bar: 1.2
Wheel Hex: 4
Steering Block Type: Kit
Lower Arm Type: Kit
Upper Arm Type: Kit
Diff Height Insert: High ● Low ○
Diff Bearing Cam: High ○ Low ●
Notes:

FF Ball Stud Spacing: 4 | FR Ball Stud Spacing: 4
Ball Stud Spacing: 3 | Steering Arm: 0
More: sodialed.com/setups

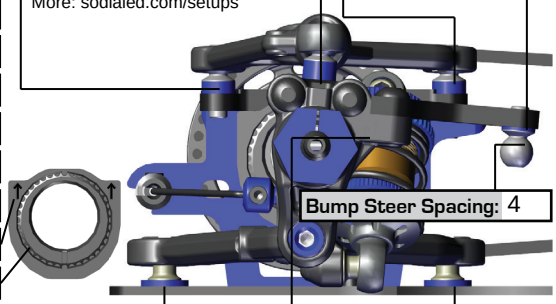

Bump Steer Spacing: 4
FF Roll Center Spacing: 1 | FR Roll Center Spacing: 1
Axle Height: +0 ● +1 ○ +2 ○

Upper Arm Position: Long ○ Short ●
Upper Arm Caster: 0 ○ -2 ○ -4 ●
KPI Spacing: 1 | Shock Spacing: 2

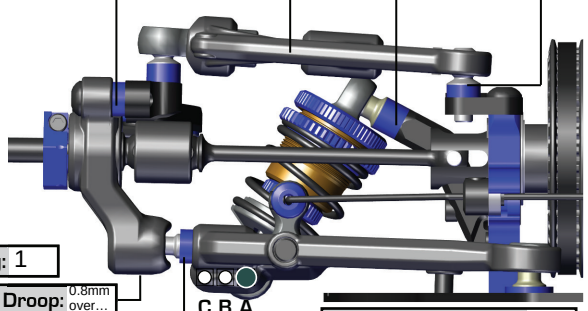

Droop: 0.8mm over...
Track Width Spacing: 2

Rear Suspension:

Ride Height: 5.4
Camber: -1
Toe: 2.5
Anti-Roll Bar: 1.3
Wheel Hex: 4
Steering Block Type: Kit
Lower Arm Type: Kit
Upper Arm Type: Kit
Diff Height Insert: High ● Low ○
Diff Bearing Cam: High ● Low ○
Notes:

RF Ball Stud Spacing: 3 | RR Ball Stud Spacing: 3
Steering Arm: Kit | Ball Stud Spacing: 2

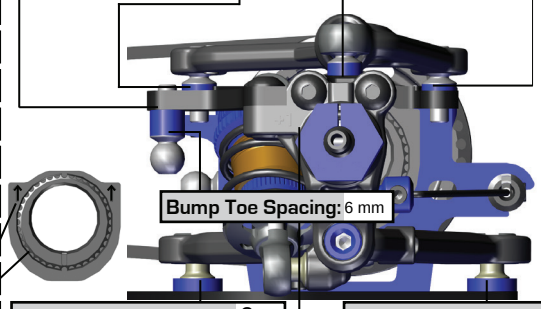

Bump Toe Spacing: 6 mm
RF Roll Center Spacing: 2 | RR Roll Center Spacing: 2
Axle Height: +0 ○ +1 ● +2 ○

Upper Arm Position: Long ○ Short ●
Upper Arm Caster: 0 ○ -2 ○ -4 ●
KPI Spacing: 1 | Shock Spacing: 3

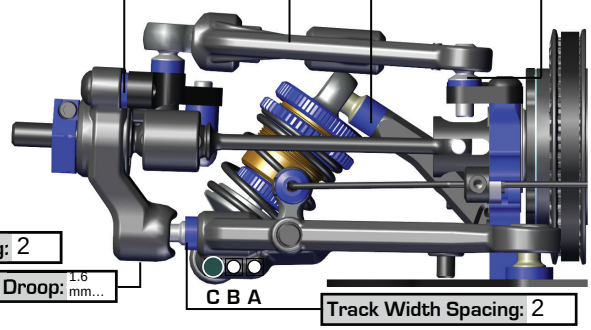

Droop: 1.6 mm...
Track Width Spacing: 2

Steering and Electronics:

Ball Stud Spacer: 2

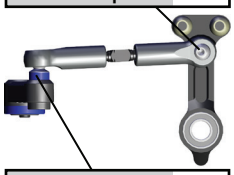

Ball Stud Spacer: 2
Motor / Turn: R1 Wurks
Spur: 90
Pinion: 50
ESC: Hobbywing

Servo Horn Type
Servo Horn: ○
Servo Saver: ●
Servo Horn Height: Xray Saver...
Servo: KO Propo
Steering Lock (In): 27
Radio: Futaba
Timing:
Battery: Reedy
Note:

Drivetrain:

	Front	Rear
Type:	Spool: ● Diff: ○	Diff: ○
Fluid:		5,000
Gear Material:		Plastic
Gear Type:		HTC
Notes:		

Tires: Gravity | Body: Twister SP LW
Additive: SXT 3.0 | Wing: Twister OG, side dams
Body Position: Fwd: ● Mid: ○ Back: ○
Note: 59mm recommended for practice, gluing...

Shocks:

	Front	Rear
Piston:	2 x 1.1mm/2 x 1.2mm	2 x 1.1mm/2 x 1.2mm
Fluid:	32.5 wt	32.5 wt
Spring:	Xray 2.4-2.7	Xray 2.7
Stroke:	9	9
Limiters:	Int: 0 Ext: 0	Int: 0 Ext: 0
PSD Sleeve:	No	No
Shock Mount:	Fixed: ● Active: ○	Fixed: ● Active: ○

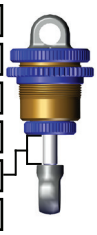

Notes: ~50 percent rebound

Track Info:

Size: Medium | Surface: Indoor carpet | Traction: Medium/High
Temp: | Notes: Setup: TC8 5280 Black Carpet Base Setup

Top Deck Flex:

Split: ● One-Piece: ○ | Carbon Fiber: ● G10: ○



Front Top Deck Type:
Rear Top Deck Type:
Notes:
F 1 screw, R 2 screws

Weight Bias and Chassis Flex:

Total Weight: 1330
Front Bias: 51 / 49
Rear Bias:

FT Steel Short Battery Weights: ○
FT Steel Battery Weights: ○
FT Steel Rear Weight: ○
Floating: Yes: ○ No: ○

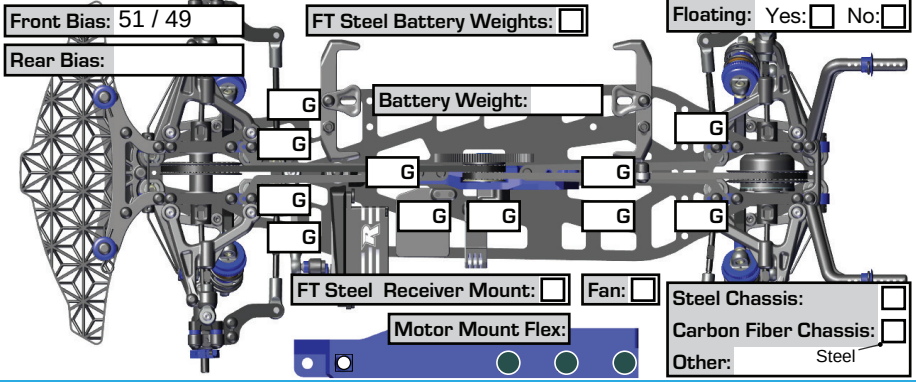

Battery Weight:
FT Steel Receiver Mount: ○
Fan: ○
Motor Mount Flex:
Steel Chassis: ○
Carbon Fiber Chassis: ○
Other: Steel

:: For more setups, visit https://www.associatedelectrics.com/teamassociated/manuals_and_setup_sheets/