Setup: SCT410 2.0
Open in So Dialed App

Tekno RC Setup Sheet — SCT410 2.0

Name: Loganville RC Complex **Date:** September 1, 2026 **Event:** Double-header **Ambient Temp:** 32C/90F

Track: INDOOR ○ OUTDOOR ○ (Outdoor hard-packed) **Size:** SMALL ○ MEDIUM ● LARGE ○ (More: sodialed.com/setups) **Traction:** LOW ○ MEDIUM ● HIGH ○

Surface: SMOOTH ○ BUMPY ● RUTTED ○ **Type:** LOOSE / LOAMY ○ HARD PACKED ○ BLUE GROOVE ○ CLAY ○ ASTRO ○

Condition: DUSTY ● DRY ● WET ○ MUDDY ○

Ackerman/Bumpsteer/Servo Saver









Front End:

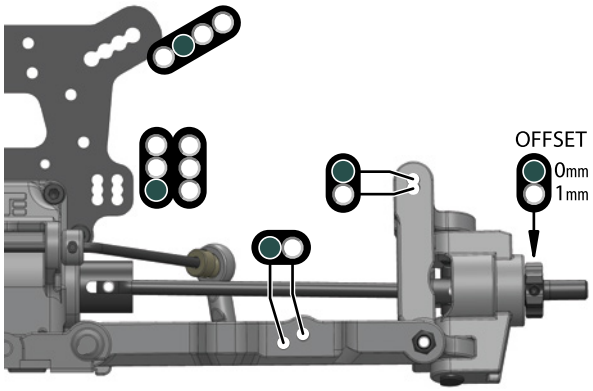

Suspension:

RIDE HEIGHT: 24	CAMBER: -2
CASTER BLOCK: 18	SWEEP: 0
KICK UP: 10	TOE: -2
SWAY BAR: 2.1	DROOP: 96

Shocks:

OIL: 700 cst	BRAND: Tekno
PISTON: 5 x 1.2mm	SPRING: 5.29lb LF Red
REBOUND: 0 %	BUILD: Emulsion

Rear End:

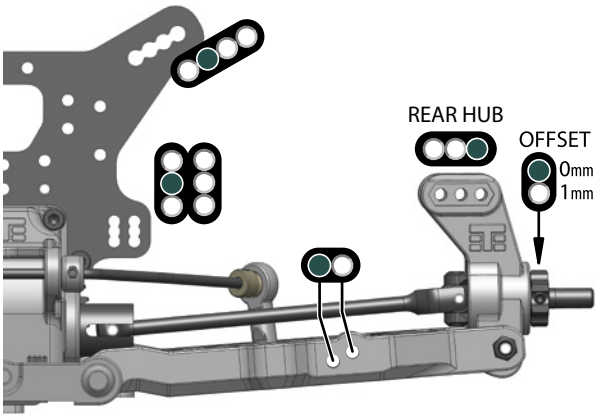

Suspension:

RIDE HEIGHT: 24	CAMBER: -2
ANTI-SQUAT: 1	TOE: 2.5
SWAY BAR: 2.1	DROOP: 104

Shocks:

OIL: 600 cst	BRAND:
PISTON: 5 x 1.1mm	SPRING: 4.47lb Yellow
REBOUND: 0 %	BUILD: Emulsion

Wheelbase:

FRONT 0/3 REAR

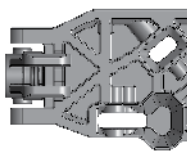

(Shims)
(Thick - 2mm)
(Thin - 1mm)

Optional Hinge Pin Braces:

"A" Block:



TKR9161 (0mm)
TKR9161B (-1mm)

"B" Block:



TKR9162 (0mm)
TKR9162B (-1mm)

"C" Block:



TKR9163B (-1mm)
TKR9163C (-2mm)

"D" Block:



TKR9164B (-1mm)
TKR9164C (-2mm)

Chassis Braces:

TURNBUCKLE BRACE: ● CENTER BRACE: ●

REAR BRACE: ●

Tires / Wheels:

BRAND / TREAD: Jconcepts Chaser

COMPOUND: SS

INSERT: Closed

WHEEL: Jconcepts

NOTES:

Body/Body Mounts:

BODY MAKE: Traxxas Slash

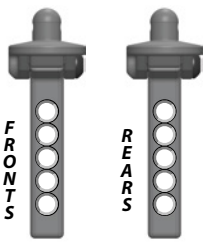

Differentials:

OPTION	FRONT	CENTER	REAR
Diff Oil	15,000	15,000	10,000
(TKR5145B)	●	●	●
(TKR5145C)	○	○	○
(TKR9114)	○	○	○
(TKR9114HD)	●	●	●
(TKR51114XB)	○	○	○
(TKR5150)	○	○	○
(TKR5150B)	●	●	●
(TKR5113B)	○	○	○
(TKR5113S)	○	○	○
(TKR5113)	●	●	●
(TKR5149X)	●	●	●
(TKR5149A)	○	○	○
(TKR5149)	○	○	○

Drivetrain:

PINION/SPUR: 19 / 41

Equipment:

ESC: Hobbywing

BATTERY: CNHL

MOTOR: Hobbywing

SERVO:

Notes: