TEKNO RC — Setup Sheet

NB48 2.2

Open in So Dialed App

Setup: My Base Setup

Name: Delgado **Date:** July 16, 2026 **Event:** Swiss championship **Ambient Temp:** 23C/73F

Track: INDOOR ○ OUTDOOR ● — More: sodialed.com/setups

Size: SMALL ● MEDIUM ○ LARGE ○

Traction: LOW ○ MEDIUM ● HIGH ○

Surface: SMOOTH ○ BUMPY ○ RUTTED ○

Type: LOOSE / LOAMY ○ HARD PACKED ● BLUE GROOVE ○ CLAY ○ ASTRO ○

Condition: DUSTY ○ DRY ● WET ○ MUDDY ○

Ackerman/Bumpsteer/Arm Plate/Spindle Height/Servo Saver





WASHERS: 0

PLATE: A B C E F G H





SPINDLE PART#
TKR9141 (+1,0)
TKR9141B (-1, -2)



FULL TURNS FROM FULLY TIGHT



(FRONT) (REAR) SWAY BAR BUSHINGS

Front End:

TOWER: Alum lightweight

UNI/CVD: U - TKR9087, C - TKR8072

STANDOFF: 0mm, +2mm, +4mm, 4mm

OFFSET: 0mm, 1mm, 2mm

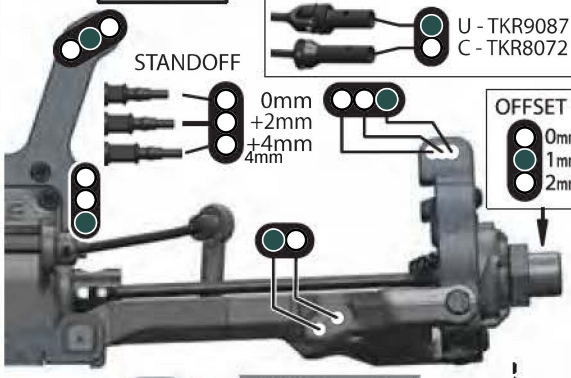



"A" Block:
TKR9161 (0mm)
TKR9161B (-1mm)



"B" Block:
TKR9162 (0mm)
TKR9162B (-1mm)

Suspension:

RIDE HEIGHT:	24	CAMBER:	-2
CASTER BLOCK:	21 deg	SWEEP:	0
KICK UP:	10	TOE:	-3
SWAY BAR:	2.3mm	SHOCK LENGTH:	113.5
UP TRAVEL LIMITERS:	0	DROOP:	+2
OIL:	600 cst	BRAND:	Ultimate
PISTON:	2x1.5/2x1.6mm	SPRING:	78mm 3.59lb Yellow
REBOUND:	0 %	BUILD:	Emulsion

Rear End:

TOWER: Aluminum

UNI/CVD: U - TKR9087, U - TKR9287, U - TKR9287B, C - TKR8072

STANDOFF: 0mm, +2mm, +4mm

REAR HUB

OFFSET: 0mm, 1mm, 2mm

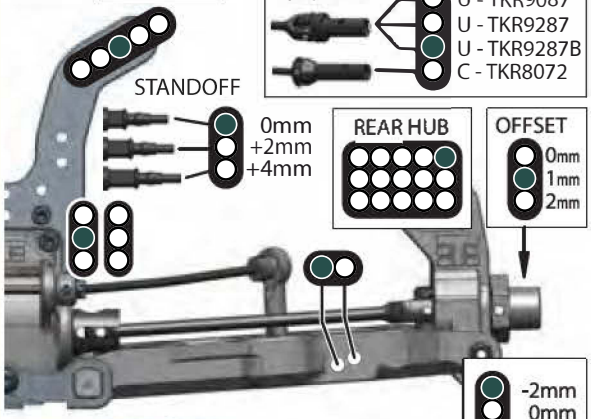

-2mm, 0mm, +2mm REAR HUB



Screw (TKR1324)

"C" Block:
TKR9163B (-1mm)
TKR9163C (-2mm)



"D" Block:
TKR9164B (-1mm)
TKR9164C (-2mm)

Suspension:

RIDE HEIGHT:	26	CAMBER:	-2
ANTI-SQUAT:	2	TOE:	2.5
SWAY BAR:	2.7mm	SHOCK LENGTH:	125
UP TRAVEL LIMITERS:	0	DROOP:	-4
OIL:	600 cst	BRAND:	
PISTON:	2x1.6/2x1.7mm	SPRING:	78mm 3.59lb Yellow
REBOUND:	0 %	BUILD:	Emulsion

Wheelbase:

F/R: 2 / 1 mm

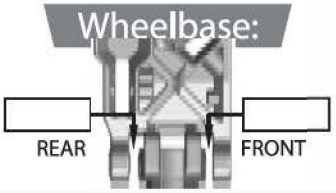

(Shims)
(Thick - 2mm)
(Thin - 1mm)

Chassis Braces:

REAR-SHORT: ○ REAR-LONG: ●

Tires / Wheels:

BRAND / TREAD:

COMPOUND:

INSERT:

WHEEL:

NOTES:

Body / Wing:

BODY MAKE: Aria Matrix

WING MAKE: HB

WING MOUNT POSITION:

0mm: ○ +7mm: ●

NOTES:

Differentials:

OPTION	FRONT	CENTER	REAR
Diff Oil	12,500	20,000	4,000
(TKR5144B)	●	●	●
(TKR5144)	○	○	○
(TKR5145B)	●	●	●
(TKR9145)	○	○	○
Standard (TKR9114-TKR91	●	●	●
Lightened (TKR5114XB-TKR5	○	○	○
(TKR9150)	○	○	○
(TKR9150B)	●	●	●
(TKR9115C)	●	●	●
(TKR9115B)	○	○	○
(TKR9149)	●	●	●
(TKR9149A)	○	○	○

Bulkheads:



FRONT		REAR	
TKR9416 (0mm)	○	TKR9416 (0mm)	○
TKR9416B (-2mm)	●	TKR9416B (-2mm)	●

Drivetrain:

CLUTCH / SPUR: 13 / 48 (teeth)

CLUTCH SHOES/SPRINGS: Aluminum / 2x Green/2x Gold

BRAKE BIAS %: 60 / 40 (front) (rear)

Engine/Electronics

ENGINE / PIPE: Corsatec / 2180

FUEL / PLUG: Merlin Fuel / P3

	STEERING	THROTTLE / BRAKE
SERVOS:	ABSIMA	Power HD

Notes: