Setup: My Base Setup
Open in So Dialed App
More: sodialed.com/setups

Name: Lucas Oliveira
Date: March 6, 2026
Track:
Weather&Temp: 24C/75F
Driver Mood:

Track Condition: Low Grip / Medium Grip / High Grip; Smooth / Dusty / Tough
Type: Outdoor clay

B21.2 SET-UP SHEET

	FRONT	REAR
SUSPENSION		
Ride Height	23	26
Downtravel With Tyres		
Swaybar	2.3	2.4
Brake Balance	- / - %	
Camber	Length: mm	Length: mm
	Degree: -2 mm	Degree: -2 mm
Steering Link/ Front Toe	Length: mm	
	Degree: mm	
SHOCKS		
Oil wt/Brand	550 cst	500 cst
Piston	VRP XV4 8x1.2 red washer	VRP XV4 8x1.2 black washer
Spring	Kit	Kit
Length	Preload: mm	Preload: mm
	Total: mm	Total: mm
Rebound		
TYRES		
Tread/Brand	Dialed RC V6	Dialed RC v6
Compound	Clay super soft	Clay super soft
Insert		
Wheel	Cobra wheels	Cobra wheels
Tyre Set Weight		g

	FRONT	CENTER	REAR
DIFFS			
Oil wt/Brand	F: 10,000	C: 15,000	7,000
Gear ratio (main/pinoin)	43/13	S: 46 P: 17	43/13

Car Weight		
Motor	Hobbywing	Xerun 4268SD
ESC	Hobbywing	XR8 G2 plus
Battery	Spektrum	LIHV 4s

Best Lapt ime
26.785 s

Runtime

Best result

Qualifying Position

Final Position
3

FRONT
Part ETO

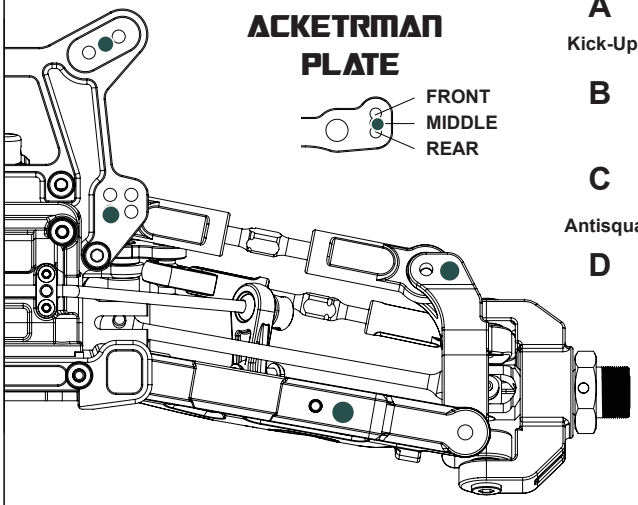

ACKETRMAN PLATE

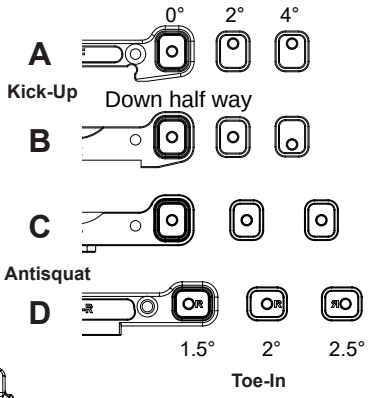

+2mm OR STOCK

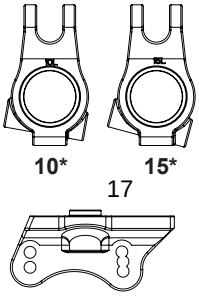

REAR
Part ETO

WHEELBASE
SHORT
MIDDLE
LONG

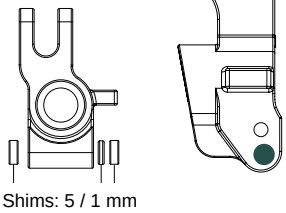

+2mm OR STOCK

R-F Inserts: Down
R-R

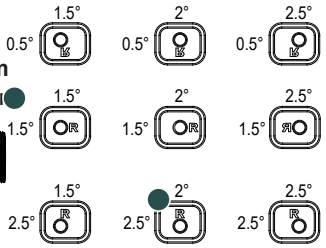

NOTES

Front: +8 droop measured with tekno droop gauge

Rear: +8 droop measured with tekno droop gauge

