RC10 B7 TEAM KIT | RC10 B7D TEAM KIT

Driver: Vin Manchanda | Event: Indoor Office Carpet | Qualify: | Main:

Date: November 3, 2025 | Track: Richfield Raceway PA | Finish: | Best Lap Time:

Front Suspension:

Setup: Richfield Raceway PA

Open in So D

Ride Height:	12 mm
Camber:	-2 deg
Toe:	-1 deg
Anti-Roll Bar:	0.9 mm
Arm Type:	Carbon
Tower Type:	Jconcepts -2 Towers
Wheel Hex:	6.5 mm
Steering Block KPI:	2
Caster Block Insert:	0 ☐ +2.5 ● +5 ☐
Bulkhead Type:	+/-2.5 deg aluminum
Kick-Up Angle:	-2.5 ☐ 0 ● +2.5 ☐
Steering Stop Spacing:	0 mm
Caster Block Spacing:	Fwd ☐ Back ●

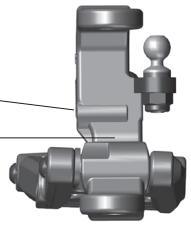

Ball Stud Spacing: 3

Ball Stud Spacing: 1



Bump Steer Spacing: 0

Steering Plate: Kit

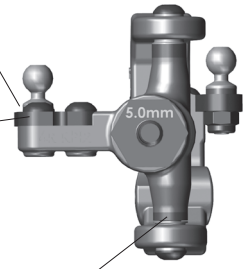

Axle Height:

+3	●
+2	☐
+1	☐
+0	☐

Steering Bellcrank Position: Up ☐ Down ●

More: sodialed.com/setups

Ball Stud Spacing: 1

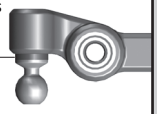

Ball Stud Spacing: 0

Ball Stud Spacing: 2

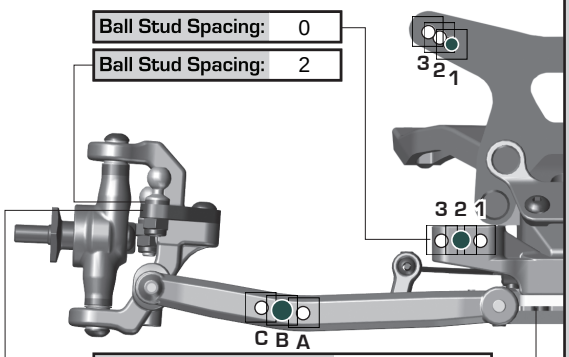

Caster Block Link Mount: +1

Front Bulkhead Spacing: 1

Rear Suspension:

Ride Height:	11 mm
Camber:	-2 deg
Anti-Roll Bar:	1.0 mm
Arm Type:	Standard
Tower Type:	JC -2 blue carbon
Arm Spacing:	Fwd ☐ Mid ☐ Back ●
Wheel Hex:	6 mm
Hub Type:	Standard
Hub Spacing:	Fwd ☐ Mid ● Back ☐
Drive Shaft:	CVA's ☐ Universals ●

C Mount: Standard

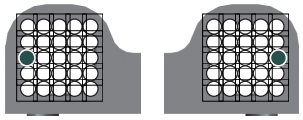

D Mount: Standard

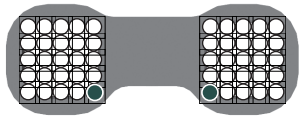

Axle Height:

▼0	3▲	+3
▼1	2▲	+2
▲1	2▼	+1
▲0	3▼	+0

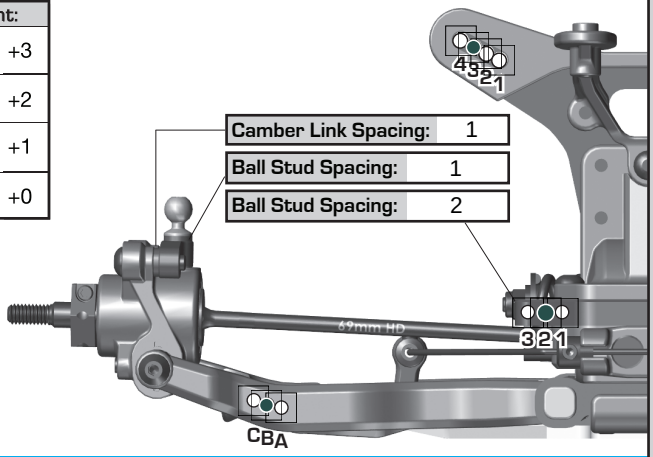

Camber Link Spacing: 1

Ball Stud Spacing: 1

Ball Stud Spacing: 2

Electronics:

Radio:		Servo:	
EPA:	Throttle: %	Brake: %	
ESC:	Reedy		
ESC Settings:			
Motor / Wind:	Reedy 17.5 T	Timing:	40
Pinion:	29	Spur:	72

Battery Mount: Std ● Offset ☐

Back 1 ● 2 ☐ 3 ☐ 4 ☐ 5 ☐ Forward

Battery:	Reedy	Weight:	
Notes:			

Drivetrain:

Differential: Ball Diff: ☐

Height: 3 mm Gear Diff: ●

Diff Setting: 30,000 cst

Notes: AE 3 gear diff

Slipper Clutch:

Type:	Slipper
# of Pads:	2 x 19mm
Setting:	

Shocks:

	Front	Rear
Piston:	2.5mm 2x1.7mm holes	2.5mm 2x1.9mm holes
Thickness:		
Fluid:	42.5 wt	35 wt
Spring:	4.3lb Orange	2.2lb Blue
Limiters:	Int: 1 Ext: 3	Int: 0 Ext: 2
Stroke:	23 mm	28 mm
Eyelet:	0 mm	+2 mm
Cup Offset:	0 ☐ +5 ● +9 ☐	0 ● +5 ☐ +9 ☐



Kashima Bodies: ☐ Chrome Shafts: ☐ Machined Spacers: ☐

Notes: AE inverted shock kit

Track Info:

Size:	Tight
Surface:	Indoor carpet
Traction:	Medium/High
Moisture:	Dry
Condition:	Smooth
Temperature:	16C/60F
Notes:	

Tires:

Front Tires:	Jconcepts Swagger	
Front Compound:	Pink	
Front Insert:	JC	
Rear Tires:	JConcepts Nessi	
Rear Compound:	Pink	
Rear Insert:	JC	
Wheel (F/R):	JC	JC
Notes:		

Body, Weight:

Body:	B7
Front Wing:	B7
Rear Wing:	B7 7"
Wing Angle:	0° ☐ 3° ☐ 6° ●
Chassis Length:	B7 -4mm
Servo Weights:	
Electronic Weights:	11g Aluminum
Total Vehicle Weight:	

Vehicle Comments:

:: For more setups, visit https://www.associatedelectrics.com/teamassociated/manuals_and_setup_sheets/