TC8 FACTORY TEAM GRAPHITE-SPEC | TC8 FACTORY TEAM STEEL-SPEC

Driver: Ken Grace | Event: | Qualify: | Main:

Date: November 14, 2026 | Track: Park Lane Hobbies | Finish: | Best Lap Time:

Front Suspension:

Open in So Dialed App

RESET

Ride Height: 5.2
Camber: -2
Toe: -1
Anti-Roll Bar: 1.4
Wheel Hex: 4
Steering Block Type: Carbon
Lower Arm Type: Carbon
Upper Arm Type: Carbon
Diff Height Insert: High ☐ Low ●
Diff Bearing Cam: High ● Low ☐
Notes: Droop measured with MR33 V2 gauge

FF Ball Stud Spacing: 3 | FR Ball Stud Spacing: 3
Ball Stud Spacing: 3 | Steering Arm: 0
More: sodialed.com/setups

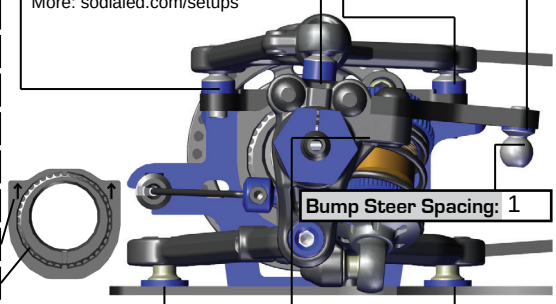

Bump Steer Spacing: 1
FF Roll Center Spacing: 1 | FR Roll Center Spacing: 1
Axle Height: +0 ☐ +1 ● +2 ☐

Upper Arm Position: Long ☐ Short ●
Upper Arm Caster: 0 ☐ -2 ☐ -4 ●
KPI Spacing: 1 | Shock Spacing: 4

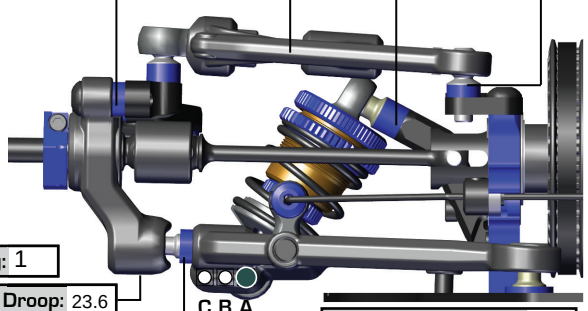

Droop: 23.6
Track Width Spacing: 2

Rear Suspension:

Ride Height: 5.4
Camber: -1
Toe: 3
Anti-Roll Bar: 1.1
Wheel Hex: 4
Steering Block Type: Carbon
Lower Arm Type: Carbon
Upper Arm Type: Carbon
Diff Height Insert: High ● Low ☐
Diff Bearing Cam: High ● Low ☐
Notes: Droop measured with MR33 V2 gauge

RF Ball Stud Spacing: 3 | RR Ball Stud Spacing: 3
Steering Arm: Kit | Ball Stud Spacing: 2

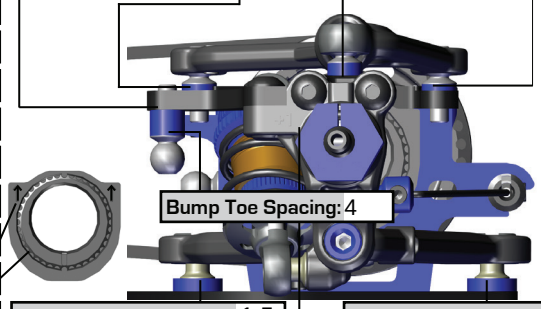

Bump Toe Spacing: 4
RF Roll Center Spacing: 1.5 | RR Roll Center Spacing: 1.5
Axle Height: +0 ☐ +1 ☐ +2 ●

Upper Arm Position: Long ☐ Short ●
Upper Arm Caster: 0 ● -2 ☐ -4 ☐
KPI Spacing: 1 | Shock Spacing: 4

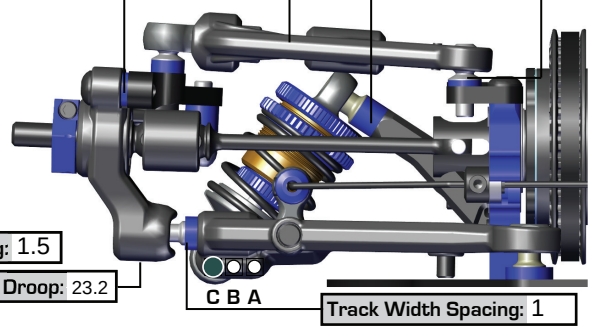

Droop: 23.2
Track Width Spacing: 1

Steering and Electronics:

Ball Stud Spacer: 2

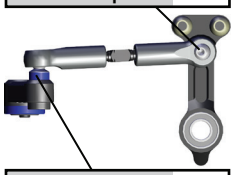

Ball Stud Spacer: 2
Motor / Turn: Reedy
Spur: 92
Pinion: 46
ESC: Reedy

Servo Horn Type
Servo Horn: ☐
Servo Saver: ●
Servo Horn Height: Low middle...
Servo: Reedy
Steering Lock (In): 22
Radio: Sanwa/Airtronics
Timing: 42
Battery: Reedy
Note:

Drivetrain:

	Front	Rear
Type:	Spool: ● Diff: ☐	Diff: ☐
Fluid:		7,000
Gear Material:		Plastic
Gear Type:		HTC

Notes:
Tires: Jaco | Body: Jconcepts A2R LW
Additive: SXT 3.0 | Wing:
Body Position: Fwd: ☐ Mid: ● Back: ☐
Note:

Shocks:

	Front	Rear
Piston:	PSD 2 x 0.8mm	PSD 2 x 0.8mm
Fluid:	500 cst	500 cst
Spring:	14.9-17.3lb Blue Prog	14.9-17.3lb Blue Prog
Stroke:	9	9
Limiters:	Int: 0 Ext: 0	Int: 0 Ext: 0
PSD Sleeve:	Yes	Yes
Shock Mount:	Fixed: ● Active: ☐	Fixed: ● Active: ☐

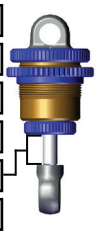

Notes:

Track Info:

Size: Tight | Surface: Indoor carpet | Traction: High
Temp: | Notes: Setup: Park Lane Hobbies

Top Deck Flex:

Split: ● One-Piece: ☐ | Carbon Fiber: ● G10: ☐



Front Top Deck Type:
Rear Top Deck Type:
Notes: FR and RF only

Weight Bias and Chassis Flex:

Total Weight: 1322
Front Bias: 50 / 50
Rear Bias:

FT Steel Short Battery Weights: ☐
FT Steel Battery Weights: ☐
FT Steel Rear Weight: ☐
Floating: Yes: ☐ No: ☐

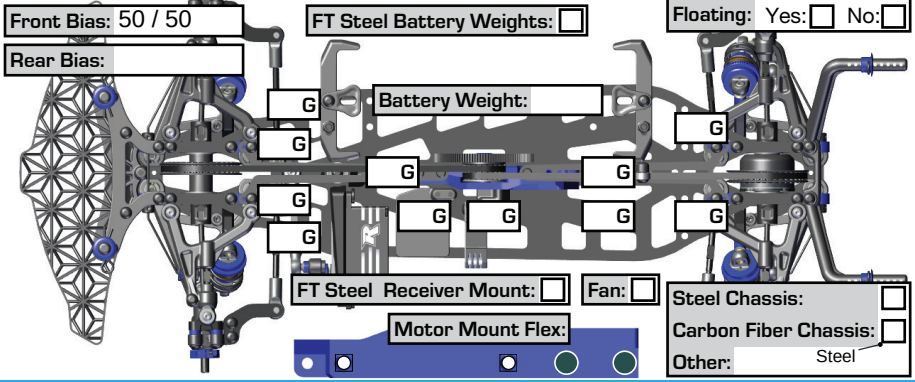

Battery Weight:
FT Steel Receiver Mount: ☐
Fan: ☐
Motor Mount Flex:
Steel Chassis: ☐
Carbon Fiber Chassis: ☐
Other: Steel

:: For more setups, visit https://www.associatedelectrics.com/teamassociated/manuals_and_setup_sheets/