マヤコ | Mayako

SETUP SHEET MX8E-24 V1.0

DRIVER: K Tran
TRACK: Loganville RC Complex
RACE: GORCS DATE: May 30, 2026
TEMP: 21C/70F BEST LAP: BEST RESULT: QUALIFYING POS.: FINAL POS.:

TRACK SIZE: ☐ TIGHT ● MEDIUM ☐ OPEN
SURFACE: ☐ DUSTY ☐ LOW GRIP ☐ BLUE GROOVE ☐ OILED ● MEDIUM GRIP ☐ HIGH GRIP (Dry)
CONDITION: ☐ SMOOTH ☐ BUMPY ● 50/50 ☐ CLAY ☐ GROOVE WITH DUST ☐ EDGY

ESC	Hobbywing	MOTOR	Hobbywing	FRONT DIFF OIL	12,000	OIL QUANTITY(gr)	2.7	DIFF GEAR	45
BOOST		BATTERY	Gens Ace	CENTER DIFF OIL	15,000	OIL QUANTITY(gr)	6.0	DIFF PINION	14
DRAG	6	BATTERY TYPE	☐ SHORTY ● FULL	REAR DIFF OIL	7,000	OIL QUANTITY(gr)	2.7	SPUR GEAR	48
BRAKE	85							PINION	17

Open in So Dialed App

SHOCKS

	FRONT	REAR
OIL	500 cst	450 cst
PISTON	5x1.5mm	5x1.5mm
SPRING	65mm 8.75T Brown	80mm 10.5T Brown
LENGTH	105 mm	123 mm
VISIBLE SHAFT LENGTH	36 mm	41.5 mm
REBOUND	0 %	0 %

FRONT SHOCK END: ☐ LONG ● SHORT
SHOCKS TYPE: ☐ EMULSION ● BLADDER

NOTES: NEW rear boots - 11/25'
Fresh shock fluids - 11/25'

CHASSIS

SETUP STATION ☐

	FRONT	REAR
TOE	-2	2.25
CAMBER	-2	-2
RIDE HEIGHT	26 mm	28 mm
DOWNTRAVEL (WITH TYRES)		
DOWNTRAVEL (on 36mm blocks)	+4 mm	-5 mm
ANTI ROLL BARS	2.3mm	2.4mm

BATTERY POSITION: ☐ FORWARD ● MIDDLE ☐ BACKWARD

WEIGHT: 6 lb, 1 Oz (dry)

TYRES

	FRONT	REAR
BRAND	VP-Pro Impulse	VP-Pro Impulse
TREAD		
COMPOUND	M4	M4
WHEELS	VP-Pro	VP-Pro
INSERTS		

NOTES:

RADIO SETTINGS

	THROTTLE/ESC	STEERING
DUAL RATE		
SPEED		
EXPO		

STEERING SERVO MODEL: Savox

	THROTTLE	BRAKE
ELECTRIC EPA	96	85

FRONT END

SHOCK TOWER ● ALUMINIUM ☐ CARBON
More: sodialed.com/setups

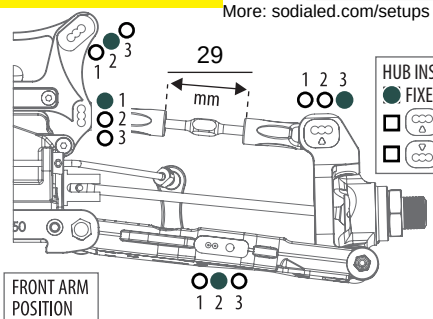

HUB INSERT: ● FIXED ☐ ☐
KNUCKLE POSITION: ☐ UP ● MIDDLE ☐ DOWN
HEX WIDTH: ☐ 4 mm ● 5 mm ☐ 6 mm
KPI OPTION: ☐ KPI 0 ○ ☐ KPI 0.5 ○ ● KPI 1 ○
C HUB CASTER: ☐ CASTER 0.5 (DOT) ● CASTER 1 (1 MARK) ☐ CASTER 2 (2 MARKS)
FRONT ARM POSITION: ☐ FRONT ● MIDDLE ☐ REAR
ARM INSERT ☐ NO ● PLASTIC ☐ CARBON

● UPPER LINKS ☐ UPPER ARMS
KNUCKLE PLATE: ● 1 LONG ☐ 2 SHORT

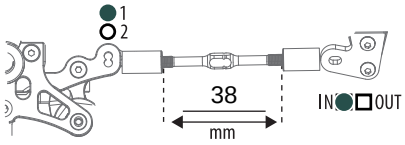

SERVO SAVER: ☐ YES ● NO
BUMP STEER ON ACKERMAN: ● UP ☐ DOWN SHIM 1 mm
BUMP STEER ON KNUCKLE: ☐ UP ● DOWN SHIM 0 mm

KICK UP: 1 / 0,5 / 0 / 0,5 / 1



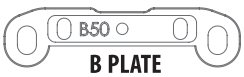

	A PLATE	B PLATE	TOWER
☐ +2mm SHIM (NO upper gearbox shim)	+2 ☐	☐	☐
☐ +1mm SHIM (1mm upper gearbox shim)	+1 ☐	☐	☐
● NO SHIM (2mm upper gearbox shim)	0 ●	●	●

REAR END

WING MOUNT POSITION

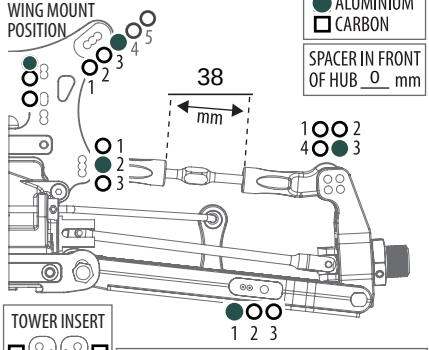

SHOCK TOWER ● ALUMINIUM ☐ CARBON
SPACER IN FRONT OF HUB 0 mm
TOWER INSERT ☐ ☐ ☐
ARM INSERT ☐ NO ☐ PLASTIC ● CARBON

OPTIONAL REAR HUB

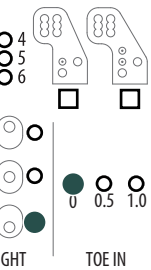

HEX WIDTH: ☐ 4 mm ☐ 5 mm ● 6 mm
REAR HUB: ☐ PLASTIC ☐ ALUMINIUM ● 3-PIECE

MPC 3-PIECE HUB
LENGTH SHIMS 0 mm
HEIGHT SHIMS 2 mm
INSIDE ○ ○ S
MIDDLE ● ○
OUT SIDE ○ ○ L
AXLE HEIGHT
TOE-IN ☐ 0.5 ● 0 ☐ 1

REAR AXLE CVD ● UNIVERSAL ☐ 91 ☐ 94
● UPPER LINKS ☐ UPPER ARMS

ANTI-SQUAT: 1 / 0,5 / 0 / 0,5 / 1

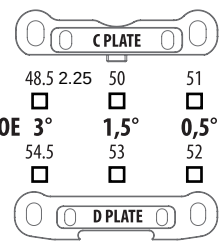

	C PLATE	D PLATE	TOWER
☐ +2mm SHIM	+2 ☐	☐	☐
☐ +1mm SHIM	+1 ☐	☐	☐
● NO SHIM	0 ●	●	●

BODY & WING

BODYSHELL: LFR
WING BRAND: VP-Pro "razor" style
WING MODEL:
WING POSITION ☐ 1 ☐ 2 ● 3 ☐ 4
1 IS FRONT HOLE (WING BACK)
WING FLAPS ☐ BIG ☐ SMALL ☐ BOTH
GURNEY ☐ NO ☐ SMALL ● BIG

NOTES

Setup: Race Setup