SET UP SHEET

COUGAR LD2

Schumacher

Setup: My Base Setup — Open in So Dialed App

Driver: braydenm — December 18, 2025 — **Event/Track:** December — Hrcr

Race: Main C — **Final:** 3 — sportsman c — Best: 11.337 — Avg: 13.635 — Consist: 83.15%

TRACK TYPE

Grip Level	Medium
Type	Tight
Condition	Smooth
Surface	Indoor carpet Dry
Air: 21C/70F	Track: 24C/75F

TYRES

More: sodialed.com/setups

	FRONT	REAR
Tyres	J concepts fuzzbites	J concepts fuzzbites
Wheels	J concepts fuzzbites	
Inserts		

Notes:

Performance notes: 3rd overall 1st race 12/17

FRONT SUSPENSION

KEY: **P** = Plastic, **A** = Alloy, **B** = Brass, **CF** = Carbon Fibre, **S2** = Schumacher Composite, **M** = Medium, **S** = Stiff, **Sh** = Short, **H** = High, **L** = Low, **F** = Front, **R** = Rear, **Y** = Yes, **N** = No

Ride Height	18 mm
Wheelbase	0 ☐ +1.5 ☐ +3.0 ● +4.5 ☐
Toe	-1 degrees
Camber at Ride Height	-1 deg
Anti Roll Bar	None
Front Wing	Y ☐ N ☐
Hub Height	H ☐ M ● L ☐
Bump Steer Washers	2 mm
Pivot Block Height	H ● M ☐ L ☐

Notes:

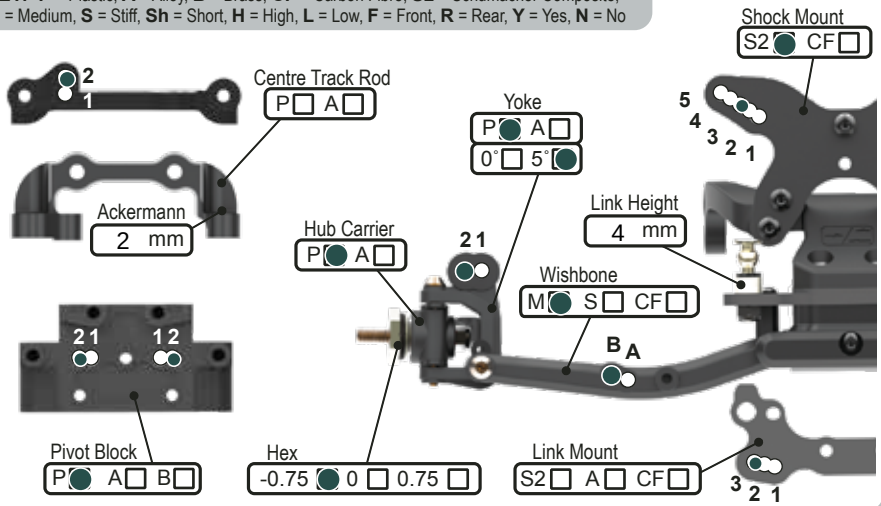

REAR SUSPENSION

KEY: **P** = Plastic, **A** = Alloy, **B** = Brass, **CF** = Carbon Fibre, **S2** = Schumacher Composite, **M** = Medium, **S** = Stiff, **Sh** = Short, **H** = High, **L** = Low, **F** = Front, **R** = Rear, **Y** = Yes, **N** = No

Ride Height	18 mm
Wheelbase	Sh ☐ M ● L ☐
Anti-Squat	1° ☐ 2° ● 3° ☐ 4° ☐
Toe	4° ☐ 3.5° ☐ 3° ● 2.5° ☐ 2° ☐ 1.5° ☐ 1.0° ☐ 0.5° ☐
Camber at Ride Height	-1 deg
Anti Roll Bar	1.0 ● 1.1 ☐ 1.2 ☐ 1.3 ☐ 1.4 ☐
Wing Gurney Height	5 mm
Rearward Shock Position Only	A ● B ☐
Driveshaft Type	CVD ☐ U/J ●

Notes: Shocks upside down

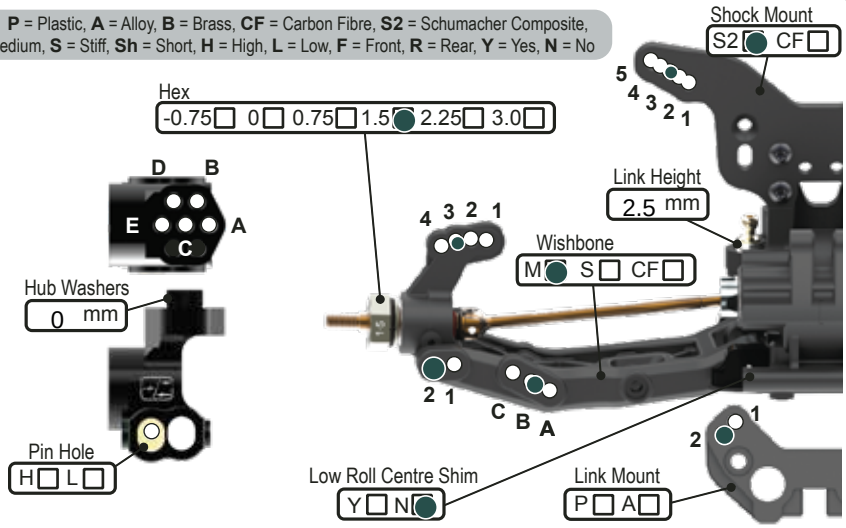

TRANSMISSION

Diff Height	H ☐ M ● L ☐
Diff Oil	200,000 cSt
Diff Type	B ☐ 2g ● 4g ☐
Motor	Hobbywing
Motor wind: 17.5 t	
Timing	50 deg
Pinion	29 t
Spur	78 t
Motor Plate	A ● CF ☐
Lock Out	Y ☐ N ●
Slipper Plates	2 ● 3 ☐

CHASSIS

Chassis	A ● C/F ☐
Side Pods	S ● C/F ☐
Chassis Insert	0mm ● +5mm ☐
LiPo Position	1 2 3 ● 5 6 7 8
X Brace	Y ☐ N ☐
Running Weight	1568 g
Radio Tray	1 ☐ 2 ☐ 3 ●

Notes:

EQUIPMENT

E.S.C.	Hobbywing
Servo	ProTek
RX	Flysky
LiPo	Cayote
Bodyshell	Kit

WEIGHTS

Chassis	F ☐ R ☐
Rear Strap	F ☐ R ☐
Radio Tray	Y ☐ N ☐
Under LiPo	Y ☐ N ☐

SHOCKS

KEY: **i** = Internal, **e** = External, **V** = Vented, **S** = Sealed, **A** = Aeration

	FRONT	REAR
Cap	V ☐ S ● A ☐	V ☐ S ● A ☐
Body		
Oil	50 wt	45 wt
Piston	3 x 1.5mm - White	3 x 1.7mm - Red
Spring	4.3lb Orange	2.8lb Orange
Limiters	Int/ext: 0 / 0 mm	0 / 0 mm
Stroke	22 mm	27.3 mm

Oil brand: CORE

Notes:

