TC8 FACTORY TEAM GRAPHITE-SPEC | TC8 FACTORY TEAM STEEL-SPEC

Driver: Ken Grace | Event: | Qualify: | Main:

Date: December 22, 2025 | Track: TR Speedway | Finish: | Best Lap Time:

Front Suspension:

Open in So Dialed App

RESET

Ride Height: 5.6
Camber: -1.5
Toe: -1
Anti-Roll Bar: 1.2
Wheel Hex: 4
Steering Block Type: Kit
Lower Arm Type: Kit
Upper Arm Type: Kit
Diff Height Insert: High ● Low ○
Diff Bearing Cam: High ● Low ○
Notes:

FF Ball Stud Spacing: 1 | FR Ball Stud Spacing: 1
Ball Stud Spacing: 3 | Steering Arm: 0
More: sodialed.com/setups

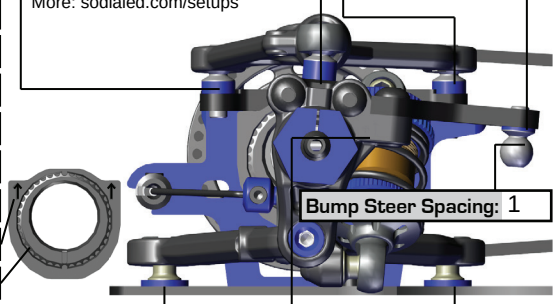

Bump Steer Spacing: 1
FF Roll Center Spacing: 2 | FR Roll Center Spacing: 2
Axle Height: +0 ○ +1 ● +2 ○

Upper Arm Position: Long ○ Short ●
Upper Arm Caster: 0 ○ -2 ○ -4 ●
KPI Spacing: 1 | Shock Spacing: 4

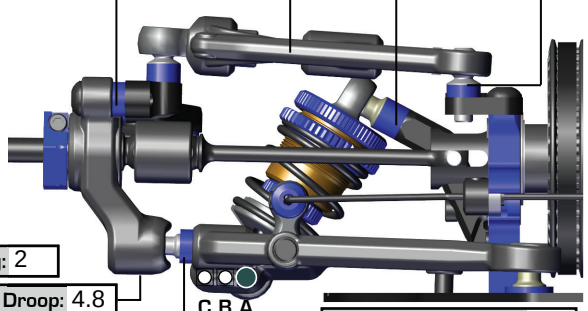

Droop: 4.8
Track Width Spacing: 2

Rear Suspension:

Ride Height: 5.8
Camber: -1.5
Toe: 3
Anti-Roll Bar: 1.2
Wheel Hex: 4
Steering Block Type: Kit
Lower Arm Type: Kit
Upper Arm Type: Kit
Diff Height Insert: High ● Low ○
Diff Bearing Cam: High ● Low ○
Notes: Droop from 3.6 to 4.0 to reduce entry push. Toe from 3 to 2 to increase rear mid rotation.

RF Ball Stud Spacing: 1 | RR Ball Stud Spacing: 1
Steering Arm: Kit | Ball Stud Spacing: 3

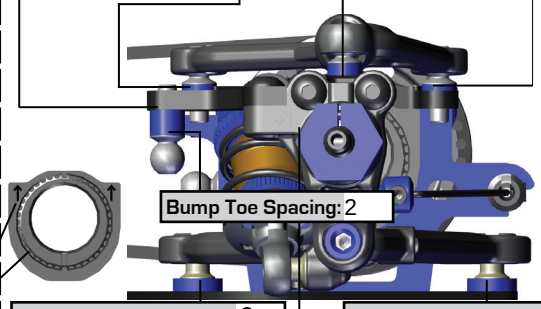

Bump Toe Spacing: 2
RF Roll Center Spacing: 2 | RR Roll Center Spacing: 2
Axle Height: +0 ○ +1 ● +2 ○

Upper Arm Position: Long ○ Short ●
Upper Arm Caster: 0 ● -2 ○ -4 ○
KPI Spacing: 1 | Shock Spacing: 4

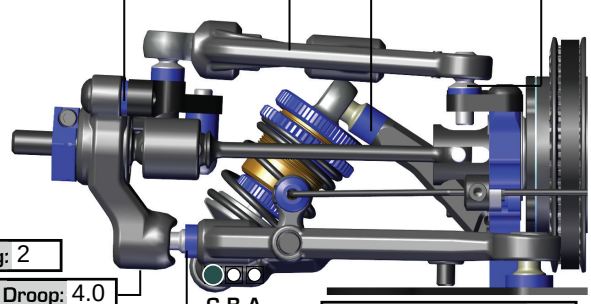

Droop: 4.0
Track Width Spacing: 1

Steering and Electronics:

Ball Stud Spacer: 2

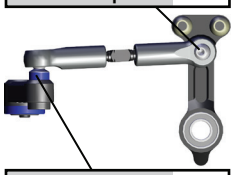

Ball Stud Spacer: 2
Motor / Turn: Reedy
Spur: 92
Pinion: 47
ESC: Reedy

Servo Horn Type
Servo Horn: ●
Servo Saver: ○
Servo Horn Height: 18.5
Servo: Reedy
Steering Lock (In): 25
Radio: Sanwa/Airtronics
Timing:
Battery: Reedy
Note:

Drivetrain:

	Front	Rear
Type:	Spool: ● Diff: ○	Diff: ○
Fluid:		5,000
Gear Material:		Plastic
Gear Type:		HTC
Notes:		

Tires: Gravity GRC132 | Body: Twister Speciale ULW
Additive: SXT 3.0 | Wing:
Body Position: Fwd: ● Mid: ○ Back: ○
Note: Glued front sidewalls

Shocks:

	Front	Rear
Piston:	2 x 1.1mm/2 x 1.2mm	2 x 1.1mm/2 x 1.2mm
Fluid:	32.5 wt	32.5 wt
Spring:	15.7lb Gray	16.5lb Blue
Stroke:	9	9
Limiters:	Int: 0 Ext: 0	Int: 0 Ext: 0
PSD Sleeve:	No	No
Shock Mount:	Fixed: ● Active: ○	Fixed: ● Active: ○
Notes:		

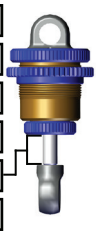

Track Info:

Size: Tight/Medium | Surface: Indoor carpet | Traction: High
Temp: | Notes: Setup: TR Speedway 12/20/25

Top Deck Flex:

Split: ● One-Piece: ○ | Carbon Fiber: ● G10: ○



Front Top Deck Type:
Rear Top Deck Type:
Notes: Kit

Weight Bias and Chassis Flex:

Total Weight: 1323
Front Bias: 50 / 50
Rear Bias:

FT Steel Short Battery Weights: ○
FT Steel Battery Weights: ○

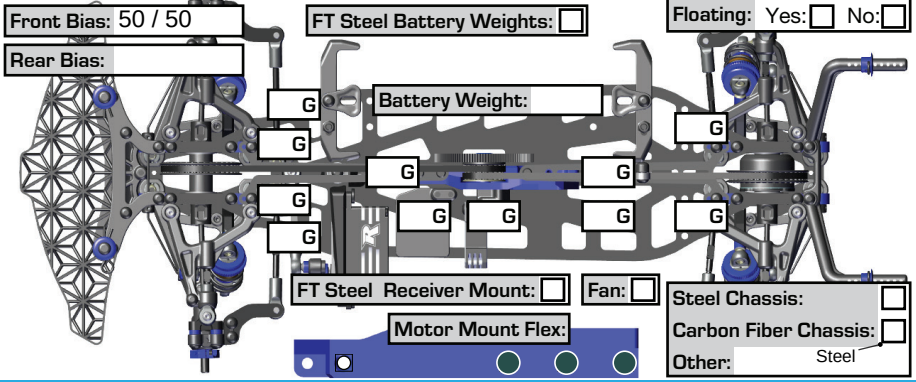

Battery Weight:
FT Steel Receiver Mount: ○ | Fan: ○
Motor Mount Flex:

FT Steel Rear Weight: ○
Floating: Yes: ○ No: ○
Steel Chassis: ○
Carbon Fiber Chassis: ○
Other: Steel

:: For more setups, visit https://www.associatedelectrics.com/teamassociated/manuals_and_setup_sheets/