MSB1 1/10 2WD Electric Buggy

B2001 Ver. 2402

Driver : Patrick Eisenmenger
Date : February 17, 2026
Track : KIM2026
Event : KIM2026

Track Condition
Size : Open ● Mid ○ Tight ○
Traction : High ○ Mid ● Low ○
Condition : Smooth ● Bumpy ○ Dry ● Wet ○
Surface : Indoor carpet

Front Suspension

Ride Height : 13 mm
Camber : -2 deg
Toe : -1 deg
Anti-roll Bar : 1.0 mm
Front Bulkhead Spacer :
Plastic: 1mm / Brass: 1mm
Notes :

Droop 25mm on 20mm blocks

Setup: KIM2026

Open in So Dialed App

More: sodialed.com/setups

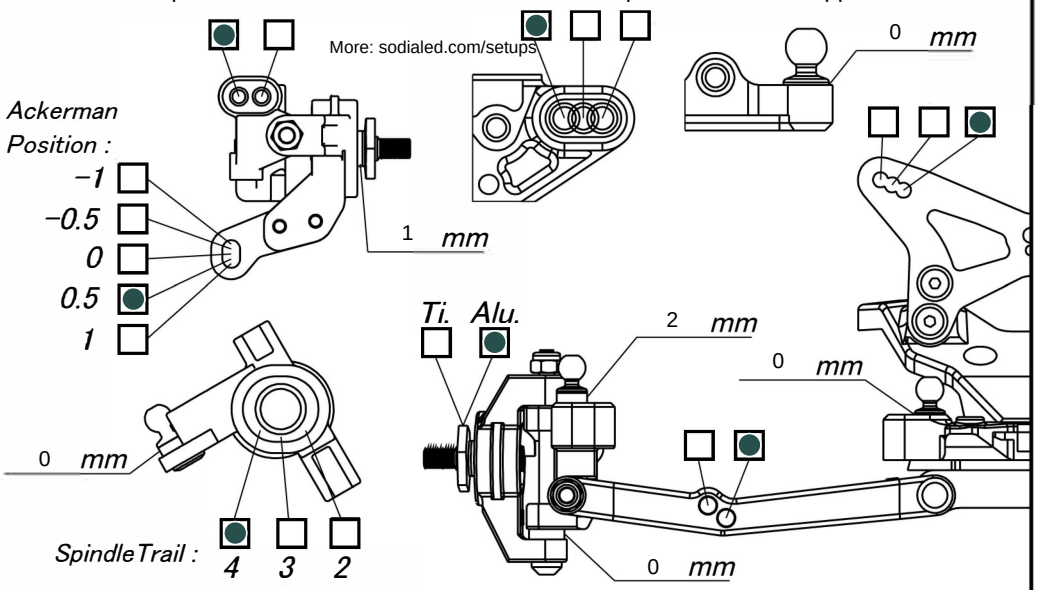

Rear Suspension

Ride Height : 14 mm
Camber : -1.5 deg
Anti-roll Bar : 1.4
Arm Position : Fwd ○ Back ●
Hub Position : Fwd ○ Mid ○ Back ●
Notes :

21mm droop on 20mm blocks D-Block +0,5mm

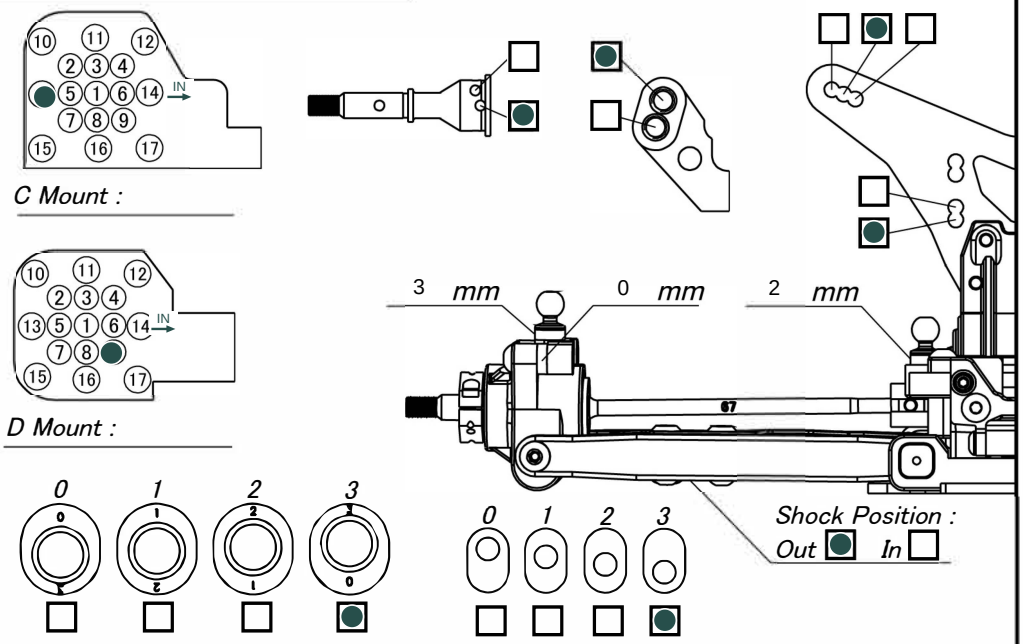

Shocks

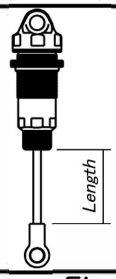

	Front	Rear
Piston :	3x1.5mm	3x1.6mm
Oil :	35 wt	35 wt
Spring :	WS Orange 4.25	WS Green 2.35
Length :	22.5	28
Limiters :	Int : 1 Ext : 2	Int : 1 Ext : 1
Eyelet Lenght :	Std ● +2 ○	Std ● +2 ○
Cup Offset :	Low ○ Mid ● High ○	Low ● Mid ○ High ○

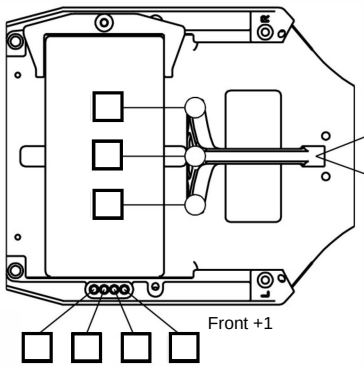

Chassis Brace Bush Type :
Plastic ○
Rubber ●

ESC Plate :
Plastic ○
Carbon ○
Brass ●

Total Weight : 1525 g

Electronics

Radio :	Flysky
Servo :	SRT
ESC :	Hobbywing
Motor :	Hobbywing
Gearing :	21 / 78
Battery :	Intellect Pioneering / g

Weight

Servo Weight : Yes ○ No ●
Battery Weight : 19g ○ 37g ○

Differential

Gear Diff ● 2 Gear ○ 4 Gear ●
Oil : 6,000
Friction O-ring : 0
Ball Diff ○ Setting :

Tire	Front	Rear
Type :	Schumacher Splinters	Schumacher Azami
Compound :	Yellow	Yellow
Inserts :	None	AKA Red closed cell
Wheel :	Schumacher	Schumacher
Additive :		

None

Body & Wing

Body :	Mugen LW
Rear Wing :	Standard
Wing Angle :	0° ● 3° ○ 6° ○
Front Wing : T-Works MSB1	Low : ● High : ○