RC10 B7 TEAM KIT RC10 B7D TEAM KIT

Driver: Craig | Event: | Qualify: | Main:

Date: February 13, 2026 | Track: Kings mountan | Finish: | Best Lap Time:

Front Suspension:

Ride Height:	13 mm
Camber:	-2 deg
Toe:	0 deg
Anti-Roll Bar:	1.0 mm
Arm Type:	Standard
Tower Type:	Standard
Wheel Hex:	6.5 mm
Steering Block KPI:	3
Caster Block Insert:	0 ● +2.5 ☐ +5 ☐
Bulkhead Type:	0 deg aluminum
Kick-Up Angle:	-2.5 ☐ 0 ● +2.5 ☐
Steering Stop Spacing:	0 mm
Caster Block Spacing:	Fwd ● Back ☐

Setup: My Base Setup

Open in So D

Ball Stud Spacing: 2

Ball Stud Spacing: 0

Bump Steer Spacing: 0

Steering Plate: B6 FT Carbon

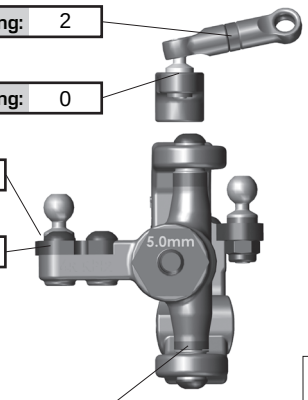

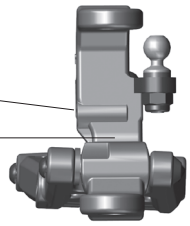

Axle Height:

+3	●
+2	☐
+1	☐
+0	☐

Steering Bellcrank Position: Up ● Down ☐

More: sodialed.com/setups

Ball Stud Spacing: 1

Ball Stud Spacing: 0.5

Ball Stud Spacing: 2

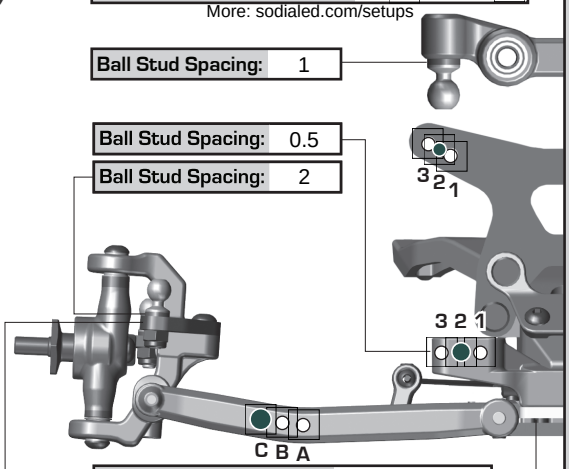

Caster Block Link Mount: +0

Front Bulkhead Spacing: 1

Rear Suspension:

Ride Height:	14 mm
Camber:	-1 deg
Anti-Roll Bar:	1.0 mm
Arm Type:	Standard
Tower Type:	Standard
Arm Spacing:	Fwd ☐ Mid ● Back ☐
Wheel Hex:	5 mm
Hub Type:	Standard
Hub Spacing:	Fwd ☐ Mid ● Back ☐
Drive Shaft:	CVA's ● Universals ☐

C Mount: Standard

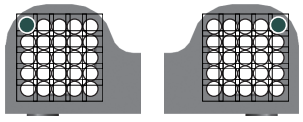

D Mount: Standard

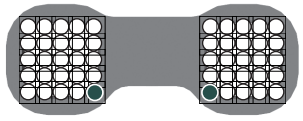

Axle Height:

▼0	3▲	+3
▼1	2▲	+2
▲1	2▼	+1
▲0	3▼	+0

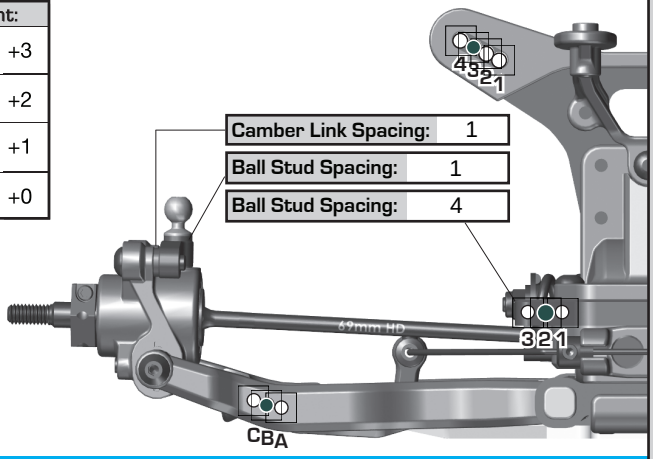

Camber Link Spacing: 1

Ball Stud Spacing: 1

Ball Stud Spacing: 4

Electronics:

Radio:	Flysky	Servo:	ProTek
EPA:	Throttle: %	Brake:	%
ESC:	Hobbywing		
ESC Settings:			
Motor / Wind:	Hobbywing 17.5 T	Timing:	
Pinion:	30	Spur:	72

Battery Mount: Std ● Offset ☐

Back 1 ☐ 2 ☐ 3 ● 4 ☐ 5 ☐ Forward

Battery:	Gens Ace	Weight:	

Notes:

Drivetrain:

Differential: Ball Diff: ☐

Height: 0 mm Gear Diff: ●

Diff Setting: 15,000 cst

Notes:

Slipper Clutch:

Type:	Slipper
# of Pads:	3
Setting:	

Shocks:

	Front	Rear
Piston:	2mm 3x1.7mm	2mm 3x1.7mm
Thickness:		
Fluid:	37.5 wt	35 wt
Spring:	4.3lb Orange	2.3lb Yellow
Limiters:	Int: ___ Ext: 1	Int: ___ Ext: 2
Stroke:	23 mm	28 mm
Eyelet:	+2 mm	+2 mm
Cup Offset:	0 ☐ +5 ☐ +9 ●	0 ● +5 ☐ +9 ☐



Kashima Bodies: ☐ Chrome Shafts: ☐ Machined Spacers: ☐

Notes:

Track Info:

Size:	Medium
Surface:	Indoor carpet
Traction:	Low
Moisture:	Dry
Condition:	Smooth
Temperature:	
Notes:	

Tires:

Front Tires:	Proline/ prizm
Front Compound:	Cr3
Front Insert:	
Rear Tires:	Proline/ Prizms
Rear Compound:	CR4
Rear Insert:	Foam
Wheel (F/R):	
Notes:	

Body, Weight:

Body:	B7
Front Wing:	B7
Rear Wing:	B7 7"
Wing Angle:	0° ☐ 3° ● 6° ☐
Chassis Length:	B7 +0mm
Servo Weights:	
Electronic Weights:	11g Aluminum
Total Vehicle Weight:	

Vehicle Comments:

:: For more setups, visit https://www.associatedelectrics.com/teamassociated/manuals_and_setup_sheets/