TEKNO RC Setup Sheet EB48 2.2

Open in So Dialed App

Setup: My Race Setup

Name: Wombat **Date:** February 20, 2026 **Event:** Practice **Ambient Temp:**

Track: INDOOR ○ OUTDOOR ● More: sodialed.com/setups **Size:** SMALL ○ MEDIUM ● LARGE ○ **Traction:** LOW ● MEDIUM ● HIGH ○

Surface: SMOOTH ○ BUMPY ● RUTTED ○ **Type:** LOOSE / LOAMY ○ HARD PACKED ● BLUE GROOVE ○ CLAY ○ ASTRO ○

Condition: DUSTY ● DRY ● WET ○ MUDDY ○

Ackerman/Bumpsteer/Arm Plate/Spindle Height/Servo Saver





WASHERS: 1

PLATE: A B C E F G H





SPINDLE PART#
TKR9141 (+1,0)
TKR9141B (-1, -2)



FULL TURNS FROM FULLY TIGHT

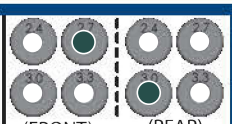

(FRONT) (REAR) SWAY BAR BUSHINGS

Front End:

TOWER 2.2

UNI/CVD
U - TKR9087
C - TKR8072

STANDOFF
0mm
+2mm
+4mm

OFFSET
0mm
1mm
2mm

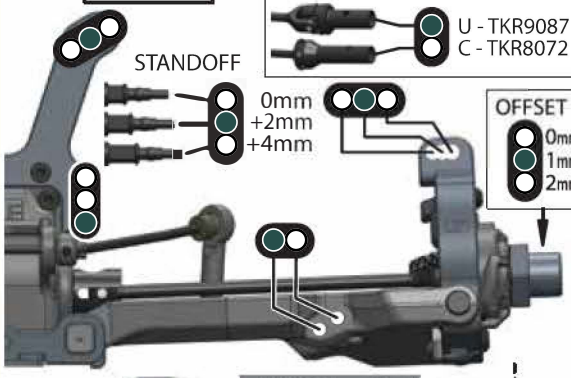

"A" Block:
TKR9161 (0mm)
TKR9161B (-1mm)



"B" Block:
TKR9162 (0mm)
TKR9162B (-1mm)

Suspension:

RIDE HEIGHT:	23	CAMBER:	-2
CASTER BLOCK:	21 deg	SWEEP:	0
KICK UP:	10	TOE:	-1
SWAY BAR:	2.3mm	SHOCK LENGTH:	115.5
UP TRAVEL LIMITERS:	0	DROOP:	4
OIL:	500 cst	BRAND:	Tekno
PISTON:	2x1.5/2x1.6mm	SPRING:	83mm 3.59lb Yellow
REBOUND:	15 %	BUILD:	Emulsion

Rear End:

TOWER 2.2

UNI/CVD
U - TKR9087
U - TKR9287
U - TKR9287B
C - TKR8072

STANDOFF
0mm
+2mm
+4mm

REAR HUB

OFFSET
0mm
1mm
2mm

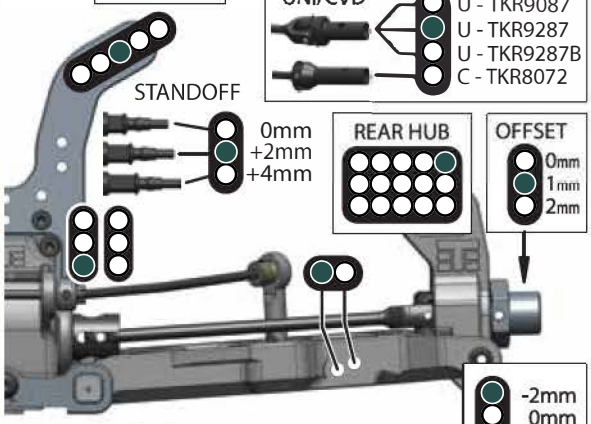

-2mm
0mm
+2mm
REAR HUB

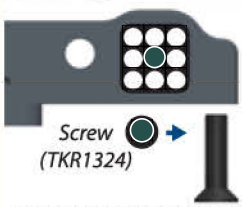

Screw (TKR1324)

"C" Block:
TKR9163B (-1mm)
TKR9163C (-2mm)



"D" Block:
TKR9164B (-1mm)
TKR9164C (-2mm)

Wheelbase:

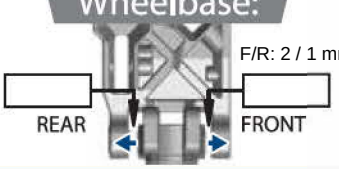

F/R: 2 / 1 mm

(Shims)
(Thick - 2mm)
(Thin - 1mm)

Suspension:

RIDE HEIGHT:	25	CAMBER:	-2
ANTI-SQUAT:	2	TOE:	2.5
SWAY BAR:	2.4mm	SHOCK LENGTH:	125
UP TRAVEL LIMITERS:	0	DROOP:	-4
OIL:	600 cst	BRAND:	
PISTON:	2x1.6/2x1.7mm	SPRING:	83mm 3.59lb Yellow
REBOUND:	0 %	BUILD:	Emulsion

Chassis Braces:

MIDDLE: ● REAR: ●

Tires / Wheels:

BRAND / TREAD:	F: Hot Race
COMPOUND:	F: Soft Long Wear
INSERT:	F: Blue
WHEEL:	F: Bankok
NOTES:	

Body / Wing:

BODY MAKE:	LFR Baretta V2
WING MAKE:	Tworks
WING MOUNT POSITION:	
0mm: ○	+7mm: ●
NOTES:	

Differentials:

OPTION	FRONT	CENTER	REAR
Diff Oil	10,000	7,000	7,000
(TKR5144B)	●	●	●
(TKR5144)	○	○	○
(TKR5145B)	●	●	●
(TKR9145)	○	○	○
Standard (TKR9114-TKR9112)	●	●	●
Lightened (TKR5114XB-TKR5112x)	○	○	○
(TKR9150)	○	○	○
(TKR9150B)	●	●	●
(TKR9115C)	●	●	●
(TKR9115B)	○	○	○
(TKR9149)	●	●	●
(TKR9149A)	○	○	○

Bulkheads:



FRONT	REAR
TKR9416 (0mm) ○	TKR9416 (0mm) ○
TKR9416B (-2mm) ●	TKR9416B (-2mm) ●

Drivetrain:

PINION / SPUR: 16 / 44 (teeth)

Equipment:

ESC: Hobbywing MOTOR: Hobbywing

BATTERY: SERVO: Ak

Notes: