RC8 B4.1

Driver: Ken Grace **Event:**
Date: May 13, 2026 **Track:** Park Lane Hobbies
Qualify: **TQ:** ☐ **Main:** **Finish:** **Best Lap Time:**

Front Suspension:

Setup: 2026 Park Lane Baseline

Open in So Dialed App

RESET

Ride Height: 25 mm
Toe: **Hex:** +0mm
Anti-Roll Bar
Size: 2.2 mm
Gap: 2.0 mm
Ackerman
Steering Arm Plate: +1 degree
Drive Shaft: CVAs: ☐ Universals: ◉
Upper Arm Material: Soft
Lower Arm Material: Kit
Notes: Alu Upper Pillow Ball

Caster Shim: 1 mm
Insert: Wing

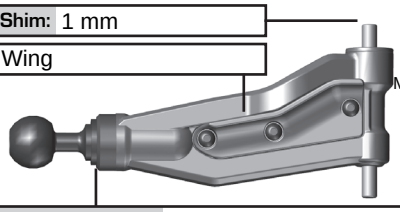

More: sodialed.com/setups

Upper Ball Type & Shims: 1.4

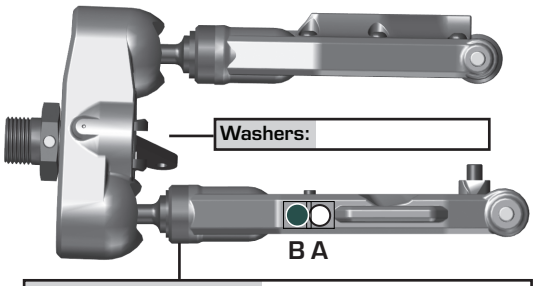

Lower Ball Type & Shims: 0.7

Wheelbase Shim: 1 mm
Insert: None

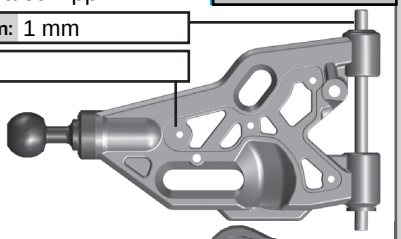

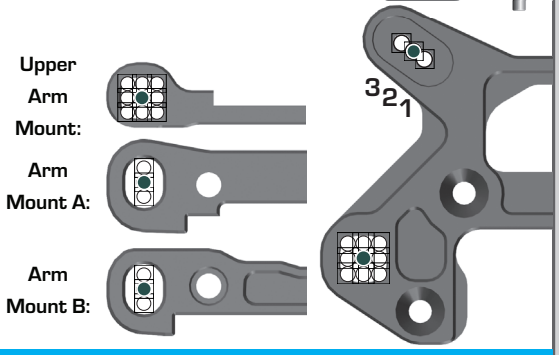

Rear Suspension:

Ride Height: 27 mm
Camber: -1 deg **Hex:** +0mm
Anti-Roll Bar
Size: 2.5 mm
Gap: 0 mm
Drive Shaft: CVAs: ☐ Universals: ◉
Chassis Brace
Pivot Type: Kit
Insert Type: Kit
Arm Material: Soft
Notes:

Hub Tower: Std: ◉ High / Low: ☐
Swaybar Ball Leverage: Wide: ◉ Narrow: ☐

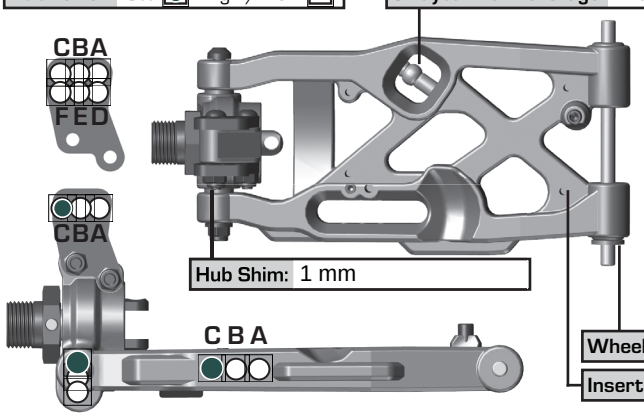

Hub Shim: 1 mm

Wheelbase Shim: 1 mm
Insert: None

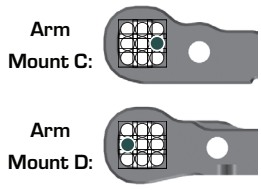

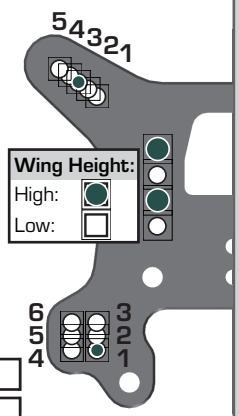

Electronics and Engine:

Radio: Sanwa/Airtronics **Receiver:** Sanwa/Airtronics
Throttle Servo: ProTek Speed:
Steering Servo: ProTek Speed:
EPA: Throttle: Brake: Steering:
EXPO: Throttle: Brake: Steering:
Brake Bias: 60/40 **D/R:**
Receiver Battery: Reedy 2400
Engine: Novarossi **Temp:**
Pipe: 9901/41021 **Fuel:** VP Lutz
Restrictor: 7mm **Glow Plug:** Nova no.5
Chassis Layout: FWB ☐ RWB ◉
Notes:

Differential:

	Front	Center	Rear
Fluid:	7,000	7,000	7,000
Gears:	High traction	High traction	High traction
Mass:			

Notes:

Clutch and Gearing:

Spur Gear: 47 **Bell:** 13
Shoes: 2 composite, 2 aluminum
Springs: 4 Green
Notes: Adjustable FT clutch

Shocks:

	Front	Rear
Piston:	XRP 20-Hole Red	XRP 20-Hole Black
Fluid:	550 cst	500 cst
Bladder:	Kit	Kit
Rebound:		
Spring:	5.1lb White	3.7lb Pink
Length:	101 mm	126 mm
Eyelet:	0 mm	+4 mm

Delrin spacers, X-Rings



Track Info:

Size: Medium
Surface: Outdoor hard-packed
Traction: Medium
Moisture: Dusty/Dry
Condition: Medium
Temperature:
Notes:

Tires:

Front Tires:
Front Compound:
Front Insert:
Rear Tires:
Rear Compound:
Rear Insert:
Wheel (F/R):
Notes:

Body, Weight:

Body: S15
Nose Cone: 3D TPU
Rear Wing: Kit
Wing Angle: 0° ☐ 2° ◉ 4° ☐
Wing Buttons: Flat ☐ Fin ◉
Vent Holes:
Total Weight:
Notes: FT Engine Mount

Radio Tray Flex Assembly:

Transponder Mount: ◉ **None:** ☐
Radio Tray Brace: ◉

Vehicle Comments: