B7.1 TEAM KIT B7.1D TEAM KIT

Driver: Ken Grace | Event: Practice | Qualify: | Main:

Date: November 10, 2026 | Track: Trains and Lanes | Finish: | Best Lap Time:

## Front Suspension:

| | |
|---|---|
| Ride Height: | 13 |
| Camber: | 0 |
| Toe: | 0 |
| Anti-Roll Bar: | 1.1 |
| Arm Type: | B7.1 Carbon |
| Tower Type: | -2mm |
| Wheel Hex: | 6.5 |
| Steering Block: | KPI 0, Trail 3 |
| Caster Block Insert: | 0 ☐ +2.5 ● +5 ☐ |
| Bulkhead Type: | Aluminum |
| Kick-Up Angle: | -2.5 ☐ 0 ● +2.5 ☐ |
| Steering Stop Spacing: | 1.2 |
| Caster Block Spacing: | Fwd ☐ Back ☐ |
| Ballstud Mount: | Standard ☐ -2mm ● |
| Notes: | Carbon caster and steering blocks |

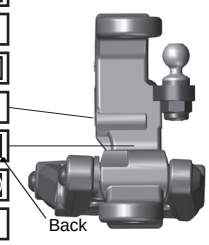


Ball Stud Spacing:

Ball Stud Spacing: 4

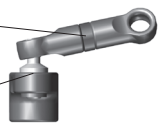

Bump Steer Spacing: 2

Position: Top ☐ Bottom ●

Steering Plate: Kit

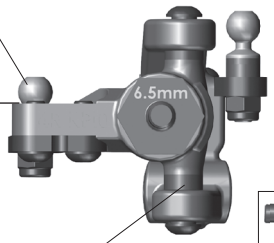


Axle Height:

| | |
|---|---|
| +3 | ☐ |
| +2 | ● |
| +1 | ☐ |
| +0 | ☐ |

Steering Bellcrank Position: Up ● Down ☐

Ball Stud Spacing: 1

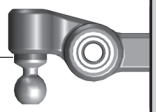

Ball Stud Spacing: 1

Ball Stud Spacing: 3

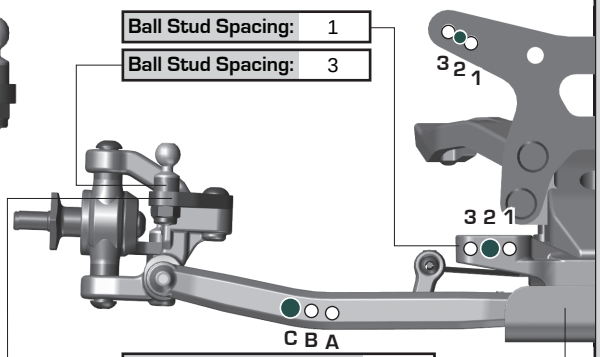


Caster Block Link Mount: +0

Front Bulkhead Spacing: 1

## Rear Suspension:

| | |
|---|---|
| Ride Height: | 13 |
| Camber: | -2 |
| Anti-Roll Bar: | 1.2 |
| Arm Type: | v2 78mm Carbon |
| Tower Type: | -2mm B7 |
| Arm Spacing: | Fwd ☐ Mid ● Back ☐ |
| Wheel Hex: | 6 |
| Hub Type: | Std ☐ HRC ● |
| Hub Spacing: | Fwd ☐ Mid ● Back ☐ |
| Drive Shaft: | CVA's ● Universals ☐ |
| Notes: | +2 FT Rear Camber Link Mount |

C Mount:

Aluminum ● Steel ☐




D Mount:

Aluminum ● Steel ☐

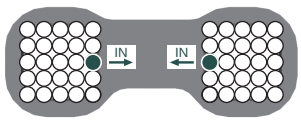


Axle Height:

| | | |
|---|---|---|
| ▼0 | 3▲ | +3 |
| ▼1 | 2▲ | +2 |
| ▲1 | 2▼ | +1 |
| ▲0 | 3▼ | +0 |

Camber Link Spacing: 1

Ball Stud Spacing: 0

Ball Stud Spacing: 0

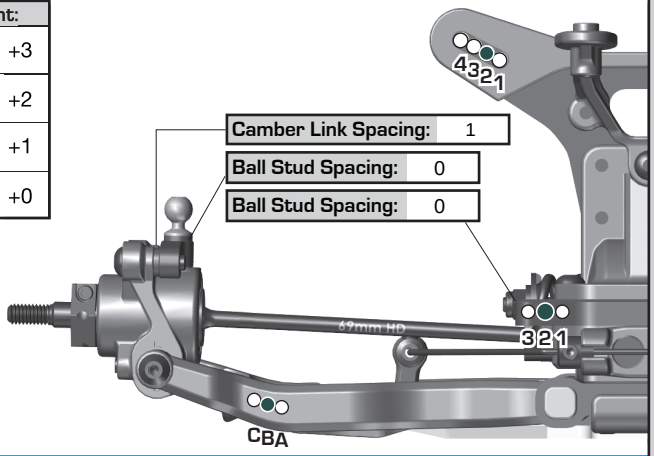


## Electronics:

| | |
|---|---|
| Radio: | Servo: |
| EPA: | Throttle: % Brake: % |
| ESC: | Reedy Blackbox 610R |
| ESC Settings: | |
| Motor / Wind: | Reedy SP5 / 17.5 |
| Timing: | |
| Pinion: | 28 |
| Spur: | 72 |

Battery Mount: Std ● Offset ☐

Back 1 ☐ 2 ● 3 ☐ 4 ☐ 5 ☐ Forward

| | |
|---|---|
| Battery: | Reedy StockStar |
| Weight: | |
| Notes: | |

## Drivetrain:

| | |
|---|---|
| Differential: | Ball Diff: ☐ |
| Height: +2 | Gear Diff: ● |
| Diff Setting: | 100,000 |
| Notes: | |

## Slipper Clutch:

| | |
|---|---|
| Type: | Direct drive |
| # of Pads: | None |
| Setting: | |
| Notes: | |

## Shocks:

| | Front | Rear |
|---|---|---|
| Piston: | 2.5mm 2x1.6mm holes | 2.5mm 2x1.9mm holes |
| Thickness: | | |
| Fluid: | 40 wt | 37.5 wt |
| Spring: | 4.6lb Purple | 2.6lb Purple |
| Limiters: | Int: 2 Ext: 2 | Int: 0 Ext: 5 |
| Stroke: | 20.1 | 29 |
| Eyelet: | 0 | 0 |
| Cup Offset: | 0 ☐ +5 ● +9 ☐ | 0 ● +5 ☐ +9 ☐ |




Kashima Bodies: ● Chrome Shafts: ● Machined Spacers: ☐

Notes: 2mm internal front spacers for longer chrome shaft

## Track Info:

| | |
|---|---|
| Size: | Medium/Tight |
| Surface: | Indoor carpet |
| Traction: | Medium |
| Moisture: | Dry |
| Condition: | More: sodialed.com/setups<br>Smooth |
| Temperature: | |
| Notes: | |

## Tires:

| | |
|---|---|
| Front Tires: | |
| Front Compound: | |
| Front Insert: | |
| Rear Tires: | |
| Rear Compound: | |
| Rear Insert: | |
| Wheel (F/R): | |
| Notes: | |

## Body, Weight:

| | |
|---|---|
| Body: | Jconcepts S15 Std |
| Front Wing: | B7 |
| Rear Wing: | B7 7" |
| Wing Angle: | 0° ☐ 3° ☐ 6° ● |
| Chassis Length: | B7 +0mm |
| Servo Weights: | |
| Electronic Weights: | 11g Aluminum |
| Total Vehicle Weight: | |

## Vehicle Comments:

Notes:

:: For more setups, visit https://www.associatedelectrics.com/teamassociated/manuals_and_setup_sheets/

Open in So Dialed App