RC8 B4.1e

Driver: Ken Grace | **Event:** Season Opener
Date: July 30, 2026 | **Track:** Park Lane Hobbies
Qualify: | **TQ:** ☐ | **Main:** | **Finish:** | **Best Lap Time:**

Front Suspension:

Setup: 5/17/26 Park Lane Season Opener

Open in So Dialed App

RESET

- **Ride Height:** 25 mm
- **Toe:** -1 deg
- **Hex:** +0mm
- **Anti-Roll Bar**
  - **Size:** 2.2 mm
  - **Gap:** 2.0 mm
- **Ackerman**
- **Steering Arm Plate:** +1 degree
- **Drive Shaft:** CVAs: ☐ Universals: ●
- **Upper Arm Material:** Soft
- **Lower Arm Material:** Kit

Notes: Alu pillow ball top arm

- **Caster Shim:** 1 mm
- **Insert:** None

More: sodialed.com/setups

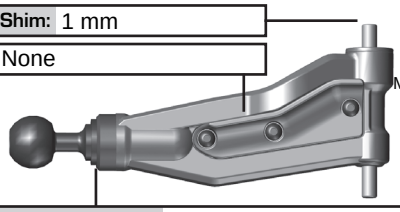

- **Upper Ball Type & Shims:** 1.4

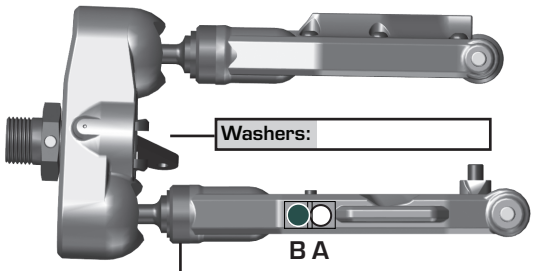

- **Washers:**
- **Lower Ball Type & Shims:** 0.7

- **Wheelbase Shim:** 1 mm
- **Insert:** None

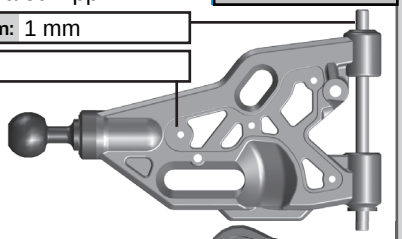

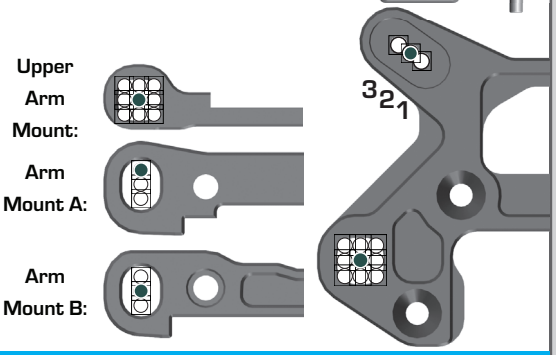

Rear Suspension:

- **Ride Height:** 27 mm
- **Camber:** -1 deg
- **Hex:** +0mm
- **Anti-Roll Bar**
  - **Size:** 2.5 mm
  - **Gap:** 0 mm
- **Drive Shaft:** CVAs: ☐ Universals: ●
- **Chassis Brace**
  - **Pivot Type:** Kit
  - **Insert Type:** Kit
- **Arm Material:** Soft
- **Notes:**

- **Hub Tower:** Std: ☐ High / Low: ●
- **Swaybar Ball Leverage:** Wide: ● Narrow: ☐

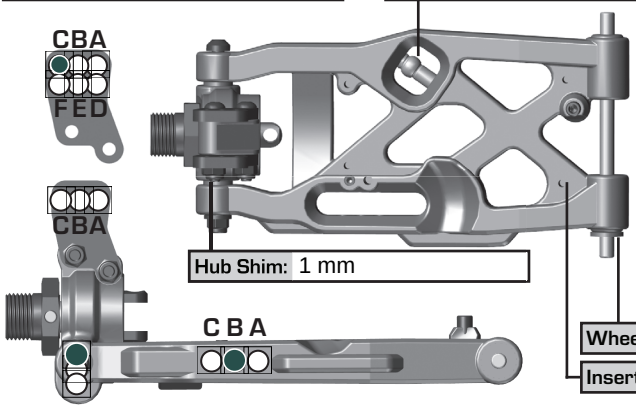

- **Hub Shim:** 1 mm
- **Wheelbase Shim:** 1 mm
- **Insert:** None

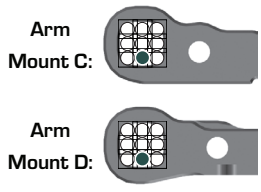

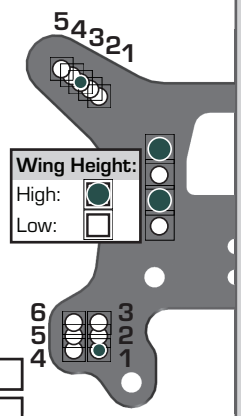

Electronics:

- **Radio:** Sanwa/Airtronics | **Receiver:** Sanwa/Airtronics
- **Steering Servo:** Sanwa/Airtronics Speed:
- **EPA:** Throttle: Brake: Steering:
- **EXPO:** Throttle: Brake: Steering:
- **Coast:** | **D/R:**
- **ESC:** Reedy BEC:
- **Motor:** Reedy
- **Battery:** Reedy Brick ☐ Saddle ●
- **Battery Position:** Rear ☐ Center ● Forward ☐
- **Chassis Layout:** FWB ● RWB ☐

Differential:

	Front	Center	Rear
Fluid:	7,000	7,000	7,000
Gears:	High traction	High traction	High traction
Mass:			

Gearing:

- **Spur Gear:** 46 | **Pinion:**
- **Notes:**

Shocks:

	Front	Rear
Piston:	MIP Bypass 5x1.5 Clear	MIP Bypass 5x1.6 Blue
Fluid:	600 cst	550 cst
Bladder:	Kit	Kit
Rebound:	0 %	0 %
Spring:	5.1lb White	1.5D Green
Length:	101 mm	124 mm
Eyelet:	0 mm	+2 mm

Chrome Shafts, FT X-Rings



Track Info:

- **Size:** Medium
- **Surface:** Outdoor clay
- **Traction:** Medium
- **Moisture:** Dusty/Dry
- **Condition:** Medium
- **Temperature:**
- **Notes:**

Tires:

- **Front Tires:** Jconcepts Reflex
- **Front Compound:** A3
- **Front Insert:** Closed Cell
- **Rear Tires:** Jconcepts Reflex
- **Rear Compound:** A3
- **Rear Insert:** Closed Cell
- **Wheel (F/R):** Jconcepts Mono
- **Notes:**

Body, Weight:

- **Body:** S15 Nitro
- **Nose Cone:** 3D Printed Wing
- **Rear Wing:** Jconcepts Razor
- **Wing Angle:** 0° ☐ 2° ● 4° ☐
- **Wing Buttons:** Flat ☐ Fin ●
- **Vent Holes:**
- **Total Weight:**
- **Notes:** RC8B3.2 side guards for S15 nitro…

Vehicle Comments: