RC8 T4 TEAM KIT

Driver: Ken Grace | Team Associated | Event: Practice

Date: July 23, 2026 | Track: Trains & Lanes Hobbies

Qualify: | TQ: ☐ | Main: | Finish: | Best Lap Time:

RESET

Front Suspension:

Ride Height:	34 mm
Toe:	-1
Hex:	+4mm
Anti-Roll Bar	
Size:	2.2mm
Gap:	2.0 mm
Ackerman	
Steering Arm Plate:	+2 degree
Drive Shaft:	RC8T3 Universals / Universals: ☐

Camber: -1 degrees

Notes: Alu pillow ball top

Caster Shim:	F/R: 3 / 1 mm
Insert Type:	Standard
Upper Ball Type:	
Upper Ball Shim:	1.4 mm
Washers:	0 mm
Lower Ball Shim:	0.35 mm

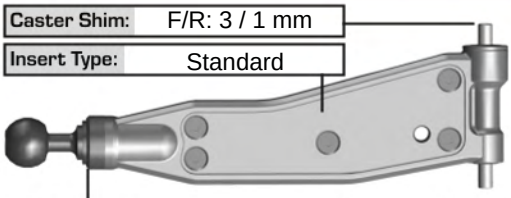

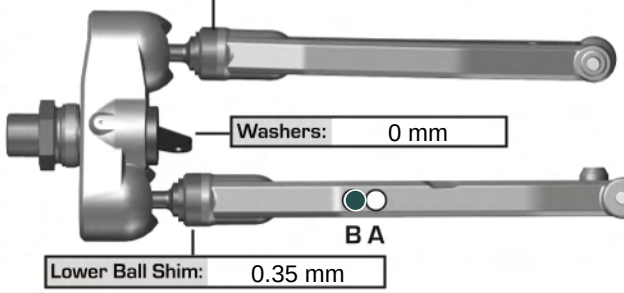

Wheelbase Shim:	Long (behind arm)
Lower Ball Type:	
Insert Type:	HD

Location: Top

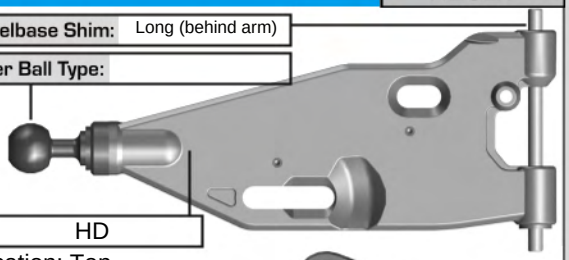

Upper Arm Mount:	
Arm Mount A:	
Arm Mount B:	

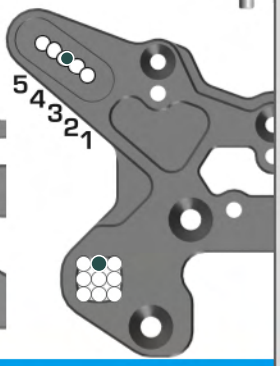

Rear Suspension:

Ride Height:	35 mm
Camber:	-2 degrees
Hex:	+4mm
Anti-Roll Bar	
Size:	2.4mm
Gap:	5.5 mm
Drive Shaft:	CVAs: ● Universals: ☐
Chassis Brace	
Pivot Type:	
Insert Type:	Insert
Notes:	

Hub Shim:	F/R: 2.5 / 2.5 mm
Wheelbase Shim:	Short (behind arm)
Insert Type:	HD

Location: Top

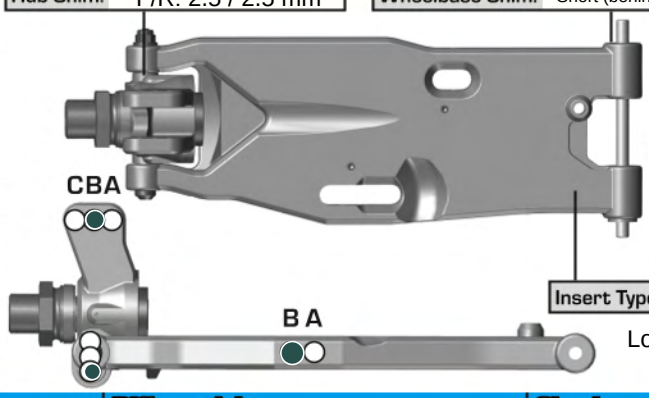

Arm Mount C:	HRC narrow
Arm Mount D:	HRC narrow
Wing Height:	High: ☐ Low: ●

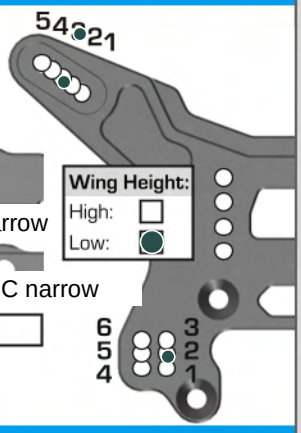

Electronics and Engine:

Radio:	Sanwa/Airtronics	M17
Receiver Battery:	Protek	
Throttle Servo:	Reedy	4020A
Steering Servo:	Reedy	4020A
EPA:	Throttle: %	Brake: %
Brake Bias:	60 / 40	D/R: %
Engine:	Protek	Temp:
Pipe:	85/2100	Fuel: VP Lutz
Restrictor:		Glow Plug: P3 Gold
Notes:		

Differential:

	Front	Center	Rear
Fluid:	15,000	15,000	7,000
Gears:	High traction	High traction	High traction
Mass:			
Notes:			

Clutch and Gearing:

Spur Gear:	46	Bell:	13
Shoes:	2x carbon 2x alu		
Springs:	Stock		
Notes:	Adjustable Clutch - MUST HAVE!		

Shocks:

	Front	Rear
Piston:	Schelle XTR 5-Hole	Schelle XTR 5-Hole
Fluid:	600 cst	550 cst
Bladder:	Emulsion	Emulsion
Rebound:	0 %	0 %
Spring:	5.7lb Yellow	4.7lb Red
Length:	105 mm	127 mm
Eyelet:	+0 mm	+0
Notes:		



Track Info:

Size:	Medium/Open
Surface:	Outdoor hard-packed
Traction:	Medium
Moisture:	Dry
Condition:	Smooth/Medium
Temperature:	Ambient: 38C/100F Track: 49C/120F
Notes:	More: sodialed.com/setups Open in So Dialed App

Tires:

Front Tire/Compound/Insert/Wheel:	
Rear Tire/Compound/Insert/Wheel:	
Notes:	

Radio Tray Flex Assembly:

Transponder Mount: ☐	None: ☐
Radio Tray Brace: ☐	

Body and Wing:

Body:	S15 Bruggy
Rear Wing:	Kit
Angle: 0° ☐ 2° ☐ 4° ☐	Button: Flat ☐ Fin ☐
Vent Holes:	

Weight:

Total Weight:	
Notes:	

Vehicle Comments:

Notes: