Setup: My Base Setup
More: sodialed.com/setups

SPARKO
WWW.SPARKORACING.COM

Open in So Dialed App

FORMULA EIGHT SETUP SHEET

Date: October 19, 2026

Name of Drive: Fernando Dantas

Track

Size: □ Open □ Med. □ Tigh
Traction: ● High □ Med. □ Low
Surface: □ Smooth □ Med. □ Bum

Engine	Plug	Muffler	Clutch Spring	Clutch Shoe	Tire	Tire Insert	Wheel	Body	Fuel
Corsatec CTN7	OS P4		Kit	Kit	Model : Compounds:			Kit	Energy

Diff Gear Set-Up

	Front	Center	Rear
Diff. Fluid	# 10,000	# 10,000	# 5,000
	46 x 13 T	46 x 13 T	46 x 13 T

Shock Set-Up

Cap ● Bladder □ Emulsion	Front	Rear
Oil Brand: _____	# 600 cst	# 600 cst
Spring Collar Spacer	mm	mm
Pistons	6 x 1.3mm	6 x 1.4mm
Spring	Hard	Medium

Ride Height

Front	Rear
22 mm	25 mm

Rebound

Front	Rear
103 mm	125 mm

Camber Angle

Front	Rear
-2 °	-2.5 °

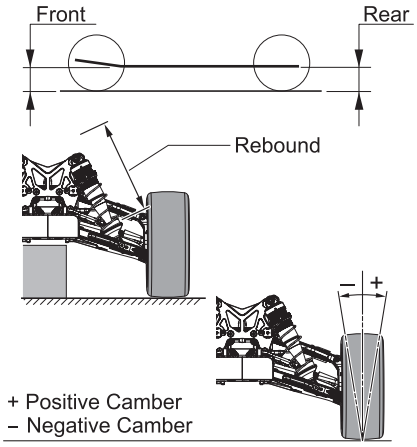

Wheelbase

_____ mm

Track Width

_____ mm

Shock Mount Position

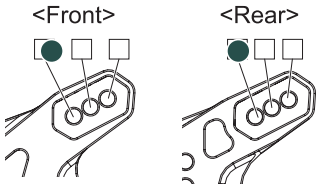

Rear Upper Arm Position

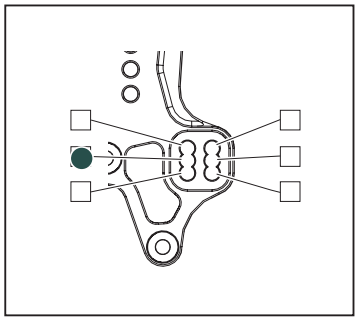

Sus. Arm

Front	□ In	● Out
Rear	□ In	● Out

Rear Hub

● Plastic
□ Aluminum

Hub Carrier Bush
□ Plastic
□ _____

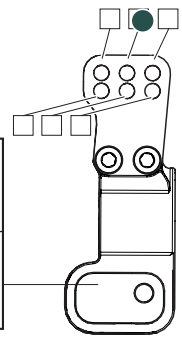

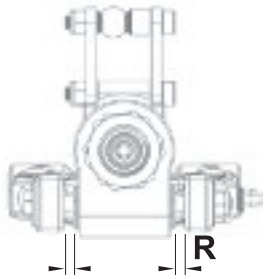

F/R: 2 / 2 mm

Arm

Front	Rear
□ Soft	□ Soft
● Hard (Std.)	● Hard (Std.)
□ _____	□ _____

Front Hub Carrier

● Plastic □ Aluminum
● 16° □ 20° □ _____ °

Front Upper Arm Position

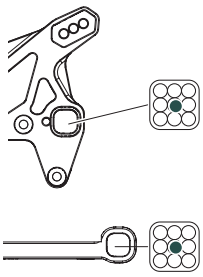

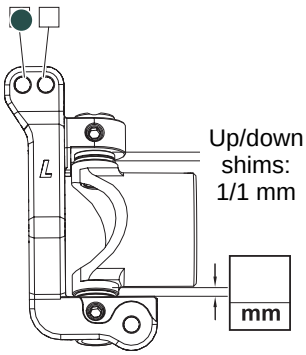

Toe Angle

Front
-1.5 deg

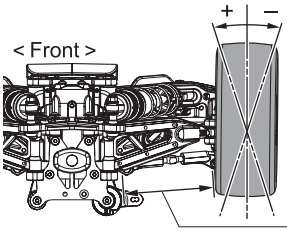

16.7 mm

Front Toe-In



Rear Toe-In



Steering Plate

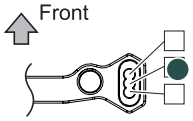

Sway Bar

Front	Rear
φ 2.5	φ 2.4
0 mm	0 mm



Wing

□ High Force
● Holes
□ Without

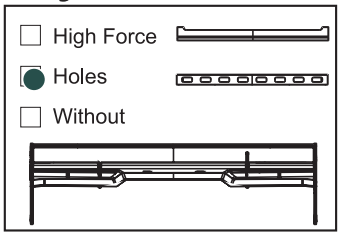

Wing Position / Angle

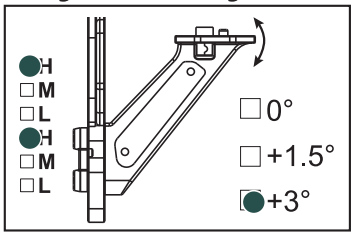

Notes