TEKNO RC — Setup Sheet

NB48 2.2

Open in So Dialed App

Setup: My Base Setup

Name: Mike Bellotti **Date:** October 17, 2026 **Event:** **Ambient Temp:**

Track: INDOOR ○ OUTDOOR ● More: sodialed.com/setups **Size:** SMALL ○ MEDIUM ● LARGE ○ **Traction:** LOW ○ MEDIUM ● HIGH ○

Surface: SMOOTH ● BUMPY ○ RUTTED ○ **Type:** LOOSE / LOAMY ○ HARD PACKED ○ BLUE GROOVE ○ CLAY ● ASTRO ○

Condition: DUSTY ○ DRY ○ WET ○ MUDDY ○

Ackerman/Bumpsteer/Arm Plate/Spindle Height/Servo Saver









SPINDLE PART#
TKR9141 (+1,0)
TKR9141B (-1, -2)

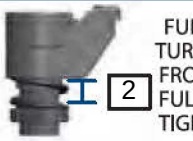

FULL TURNS FROM FULLY TIGHT



(FRONT) (REAR) SWAY BAR BUSHINGS

Front End:

TOWER Aluminum

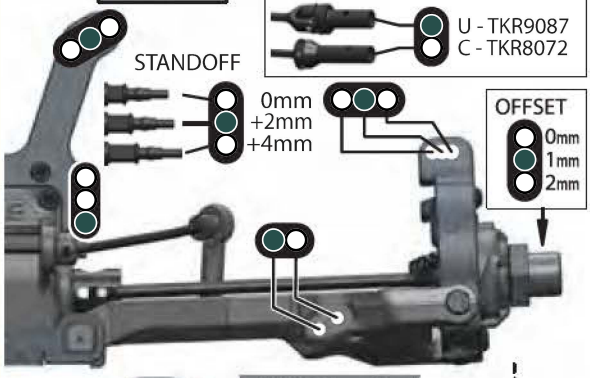

Suspension:

RIDE HEIGHT:	24	CAMBER:	-2
CASTER BLOCK:	21 deg	SWEEP:	0
KICK UP:	10	TOE:	-2
SWAY BAR:	2.3mm	SHOCK LENGTH:	115.5
UP TRAVEL LIMITERS:	0	DROOP:	4
OIL:	500 cst	BRAND:	Tekno
PISTON:	2x1.5/2x1.6mm	SPRING:	83mm 3.59lb Yellow
REBOUND:	0 %	BUILD:	Emulsion



"A" Block:
TKR9161 (0mm)
TKR9161B (-1mm)



"B" Block:
TKR9162 (0mm)
TKR9162B (-1mm)

Rear End:

TOWER Aluminum

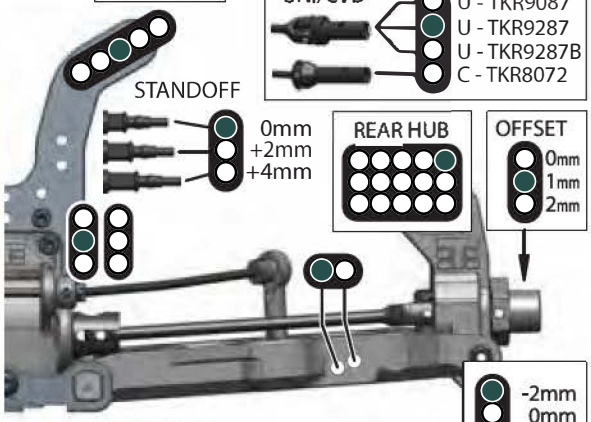

Suspension:

RIDE HEIGHT:	26	CAMBER:	-2
ANTI-SQUAT:	2	TOE:	2.5
SWAY BAR:	2.5mm	SHOCK LENGTH:	125
UP TRAVEL LIMITERS:	0	DROOP:	-4
OIL:	600 cst	BRAND:	
PISTON:	2x1.6/2x1.7mm	SPRING:	83mm 3.59lb Yellow
REBOUND:	0 %	BUILD:	Emulsion



Screw (TKR1324)

"C" Block:
TKR9163B (-1mm)
TKR9163C (-2mm)



"D" Block:
TKR9164B (-1mm)
TKR9164C (-2mm)

Wheelbase:

F/R: 2 / 1 mm

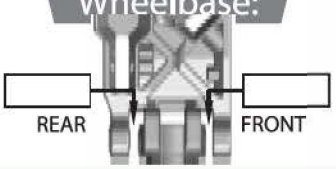

Chassis Braces:

REAR-SHORT: ● REAR-LONG: ●

Tires / Wheels:

BRAND / TREAD:
COMPOUND:
INSERT:
WHEEL:
NOTES:

Body / Wing:

BODY MAKE: Kit
WING MAKE: Kit
WING MOUNT POSITION:
0mm: ○ +7mm: ●
NOTES:

Differentials:

OPTION	FRONT	CENTER	REAR
Diff Oil	10,000	10,000	7,000
(TKR5144B)	○	○	○
(TKR5144)	●	●	●
(TKR5145B)	●	●	●
(TKR9145)	○	○	○
Standard (TKR9114-TKR91	●	●	●
Lightened (TKR5114XB-TKR5	○	○	○
(TKR9150)	●	●	●
(TKR9150B)	○	○	○
(TKR9115C)	●	●	●
(TKR9115B)	○	○	○
(TKR9149)	●	●	●
(TKR9149A)	○	○	○

Bulkheads:



FRONT		REAR	
TKR9416 (0mm)	○	TKR9416 (0mm)	○
TKR9416B (-2mm)	●	TKR9416B (-2mm)	●

Drivetrain:

CLUTCH / SPUR: 13 / 48 (teeth)

CLUTCH SHOES/SPRINGS: Aluminum / 2x Green/2x Gold

BRAKE BIAS %: 60 / 40 (front) (rear)

Engine/Electronics

ENGINE / PIPE: Protek / 2090/75mm

FUEL / PLUG: Sidewinder 30 / P3 Gold

	STEERING	THROTTLE / BRAKE
SERVOS:	ProTek	ProTek

Notes: