RC10 B84.1 TEAM KIT RC10 B84.1D TEAM KIT

Driver: Big Steely Event: Qualify: Main:

Date: October 18, 2026 Track: Finish: Best Lap Time:

Open in So Dialed App

Front Suspension:

Ride Height:	12
Camber:	-2
Toe:	-1
Anti-Roll Bar:	1.3
Arm Type:	73mm
Tower Type:	Kit
Wheelbase Shim:	Mid
Wheel Hex:	5
Steering Block Type:	
Caster Block:	-2° ☐ -1° ☐ 0° ● +1° ☐ +2° ☐
Chassis Brace Material:	Plastic
Top Plate Brace Material:	Kit
Front Axles:	CVA ● DCV ☐
Notes:	

Lower Brace Type: Fixed ☐ Pivot ●

More: sodialed.com/setups

Ball Stud Spacing: 2

Arm Mount A: 1° ☐ 0 .5° ☐ Gray ☐ Black ☐

Shims:

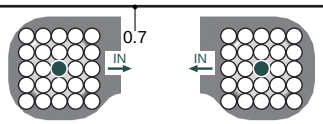

Arm Mount B: 1° ☐ 0 .5° ☐ Gray ☐ Black ☐

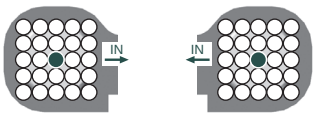

Diff Height:

+3	☐
+2	☐
+1	☐
+0	●

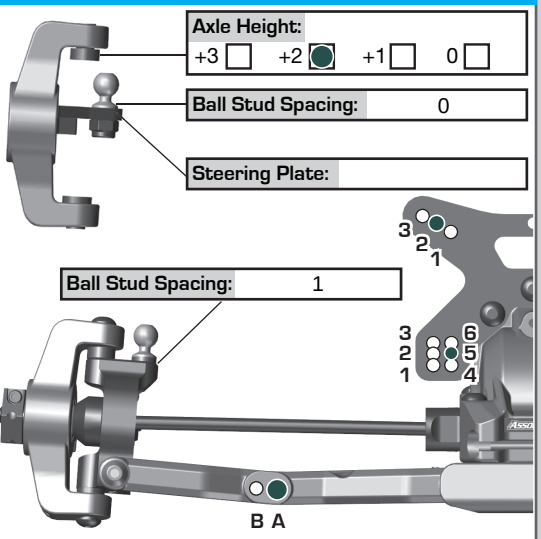

Rear Suspension:

Ride Height:	12
Camber:	-2
Anti-Roll Bar:	1.4
Arm Type:	B7 v2
Tower Type:	Kit
Wheelbase Shim:	Mid
Wheel Hex:	6
Hub Type:	R1 Aluminum
Drive Shaft Type:	66mm dogbone
Chassis Brace Material:	Plastic
Upper Chassis Brace Material:	Plastic
Hub Spacing:	Fwd ☐ Mid ● Back ☐
Notes:	

Lower Brace Type: Fixed ☐ Pivot ☐

Rear Chassis Brace Screws:

Arm Mount C: 1° ☐ 0 .5° ☐ Gray ☐ Black ☐

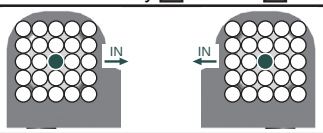

Arm Mount D: 1° ☐ 0 .5° ☐ Gray ☐ Black ☐

Shims:



Axle Height:

▼0	3▲	+3
▼1	2▲	+2
▲1	2▼	+1
▲0	3▼	+0

Diff Height:

+3	☐
+2	☐
+1	●
+0	☐

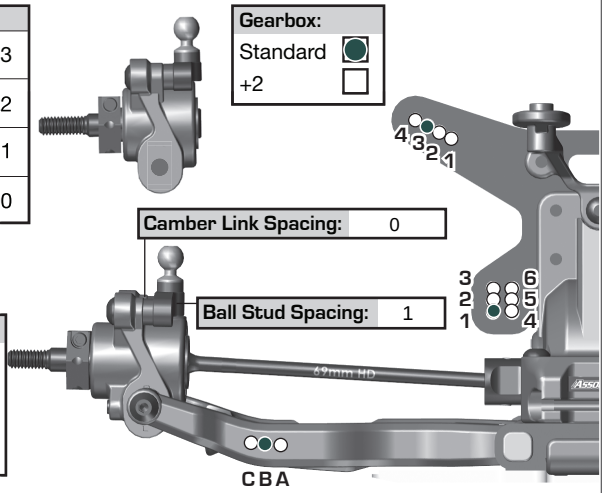

Electronics:

Radio:	Flysky Nobel nb4 +	Servo:	ProTek 300
EPA:	Throttle: %	Brake:	%
ESC:	Hobbywing		
ESC Settings:			
Motor / Wind:		Timing:	
Pinion:	24	Spur:	72
Motor Position:	Forward: ☐	Back:	●
Battery Position:	Back 1 ☐ 2 ☐ 3 ☐ 4 ☐ 5 ● Forward		
Battery:	R1 6300	Weight:	
Notes:			

Differential:

	Front	Center	Rear
Fluid:	15,000	200,000	15,000
Gears:	Plastic	Plastic	Plastic
Type:	LTC	LTC	LTC

Notes:

Slipper Clutch:

Type:	
# of Pads:	
Setting:	
Notes:	

Shocks:

	Front	Rear
Piston:	2 x 1.7mm	2 x 1.9mm
Thickness:	2.5	2.5
Fluid:	35 wt	30 wt
Spring:	4.0lb Red	2.3lb Yellow
Limiters:	Int: 2 Ext: 1	Int: 0 Ext: 0
Stroke:	22	28
Eyelet:	+0	+2
Cup Offset:	0 ☐ +5 ☐ +9 ●	0 ● +5 ☐ +9 ☐



Kashima Bodies: ☐ Kit Chrome Shafts: ☐ Kit Machined Spacers: ☐

Notes:

Track Info:

Size:	
Surface:	Outdoor astroturf
Traction:	High
Moisture:	
Condition:	
Temperature:	
Notes:	

Tires:

Front Tires:	JCONCEPTS fuzz bite
Front Compound:	Pink
Front Insert:	Open foam
Rear Tires:	JCONCEPTS / Drop shot
Rear Compound:	Pink
Rear Insert:	Open foam
Wheel (F/R):	JCONCEPTS/JCONCEPTS
Notes:	

Body, Weight:

Body:	Lightweight
Front Wing:	Nose
Rear Wing:	7"
Rear Wing Mount:	0 ☐ -2 ●
Wing Angle:	0° ☐ 3° ☐ 6° ●
Chassis:	T84
Total Vehicle Weight:	
Notes:	

Vehicle Comments:

Notes:

:: For more setups, visit https://www.associatedelectrics.com/teamassociated/manuals_and_setup_sheets/