RC10 B6.4

Setup: QA 1716 Offline Copy

Driver: QA José Android | Event: | Date: | Track: | Qualify: | TQ: ☐ | Main: | Finish: | Best Lap Time:

Front Suspension:

Open in So Dialed App

Ride Height:	
Camber:	-3 degrees
Toe:	
Anti-Roll Bar:	0.9mm Gray
Arm Type:	Gull-wing
Tower Type:	B6.3 Gull-wing
Wheel Hex:	
Steering Block:	4 mm
Caster Block Insert:	+2.5 degrees
Bulkhead Type:	0 degrees
Kick-Up Angle:	
Notes:	

Bump Steer Spacing: 0 mm

Steering Plate: +1mm

Steering Stop Spacing: 0 mm

Caster Block Spacing: Long (hub forward)

Axle Height:
- +3 ☐
- +2 ☐
- +1 ●
- 0 ☐

Ball Stud Spacing: 1 mm

Steering Bellcrank Position:
- Up ☐
- Down ☐

Ball Stud Spacing: 1 mm

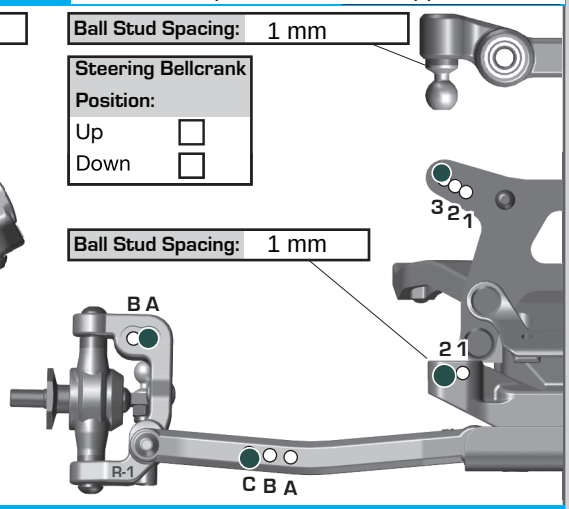

Rear Suspension:

Ride Height:	
Camber:	-1 degrees
Anti-Roll Bar:	1.3mm Gray
Arm Type:	73mm
Tower Type:	Wide
Arm Spacing:	Long (arm back)
Wheel Hex:	5mm
Shock Mounting Position:	Front of Arm ● Rear of Arm ☐
Hub Spacing:	Fwd ☐ Mid ● Back ☐
CVA Bone Length:	69mm
CVA Axle Type:	
Notes:	

C Mount: Wide aluminum

D Mount: Wide aluminum

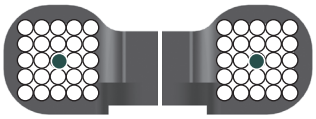

Axle Height:

●	▼0	3▲	+3
○	▼1	2▲	+2
○	▲1	2▼	+1
○	▲0	3▼	+0

Camber Link Spacing: 2 mm

Ball Stud Spacing: 2 mm

Ball Stud Spacing: 4 mm

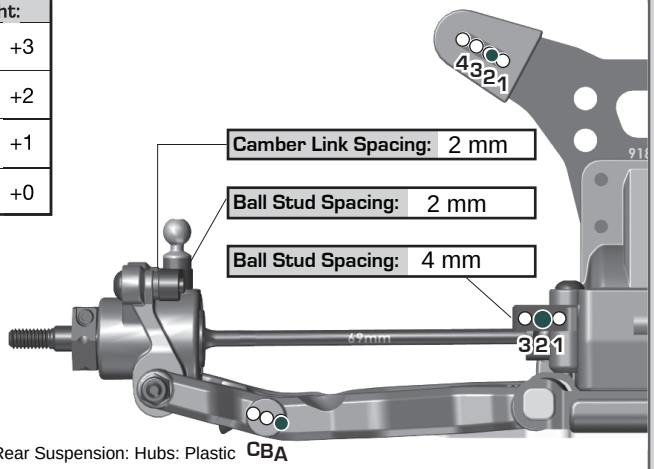

Rear Suspension: Hubs: Plastic

Electronics:

Radio:	
Servo:	
EPA:	Throttle: % Brake: %
ESC:	
ESC Settings:	
Motor / Wind:	
Timing:	
Pinion:	25
Spur:	78
Battery:	
Battery Position:	Front hole / 5
Battery Weight:	

Drivetrain:

Transmission: Laydown

Differential: Ball Diff: ☐ Gear Diff: ●

Height: 3 mm

Diff Setting: 5,000 cst

Notes:

Slipper Clutch:

Type:	Slipper; HD B6.3
# of Pads:	2 x 11mm ID Octalock LCF
Setting:	

Shocks:

Oil: Team Associated

	Front	Rear
Piston:	2mm 2x1.6mm holes	2mm 2x1.7mm holes
Thickness:		
Fluid:	35 wt	30 wt
Spring:	4.0lb Red	2.2lb Blue
Limiters:	Int/ext: 0 / 0 mm	Int/ext: 0 / 0 mm
Stroke:	21 mm	27.5 mm
Eyelet Length:	+2 mm	+4 mm
Cup Offset:	5 mm	0 mm
Notes:		

Track Info:

Size:	Small ☐ Medium ☐ Large ☐ Extra Large ☐
Surface:	Indoor carpet
Traction:	High
Moisture:	Dry ☐ Damp ☐ Wet ☐
Condition:	Indoor ☐ Outdoor ☐ Dusty ☐ Hard Packed ☐ Bumpy ☐ Grooved ☐ Smooth ☐ Loamy ☐
Temperature:	Ambient: Track:
Notes:	

Tires:

Front Tires:	
Front Compound:	
Front Insert:	
Rear Tires:	
Rear Compound:	
Rear Insert:	
Wheel (F/R):	
Notes:	

Body, Weight:

Body:	B6.4
Front Wing:	B6.2
Rear Wing:	B6
Wing Angle:	6 degrees
Chassis Length:	B6.4 +3mm
	Chassis: 33g steel, 24g steel
Total Vehicle Weight:	

Vehicle Comments: