TC8 FACTORY TEAM GRAPHITE-SPEC | TC8 FACTORY TEAM STEEL-SPEC

Driver: Vin Manchanda | Event: | Qualify: | Main:

Date: November 22, 2026 | Track: JRCP | Finish: 3 | Best Lap Time:

Front Suspension:

Open in So Dialed App

RESET

Ride Height: 5.1
Camber: -2
Toe: -2
Anti-Roll Bar: 1.4
Wheel Hex: 4
Steering Block Type: Kit
Lower Arm Type: Kit
Upper Arm Type: Kit
Diff Height Insert: High ☐ Low ●
Diff Bearing Cam: High ☐ Low ●
Notes:

FF Ball Stud Spacing: 2 | FR Ball Stud Spacing: 2
Ball Stud Spacing: 4 | Steering Arm: 0
More: sodialed.com/setups

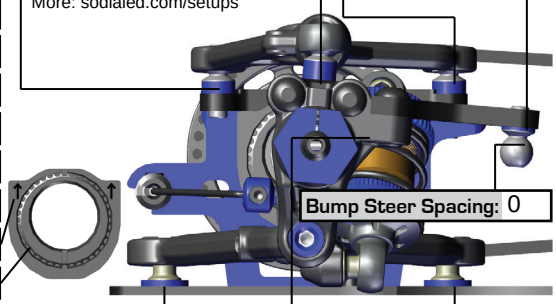

Bump Steer Spacing: 0
FF Roll Center Spacing: 1 | FR Roll Center Spacing: 1
Axle Height: +0 ☐ +1 ● +2 ☐

Upper Arm Position: Long ☐ Short ●
Upper Arm Caster: 0 ☐ -2 ☐ -4 ●
KPI Spacing: 2 | Shock Spacing: 2

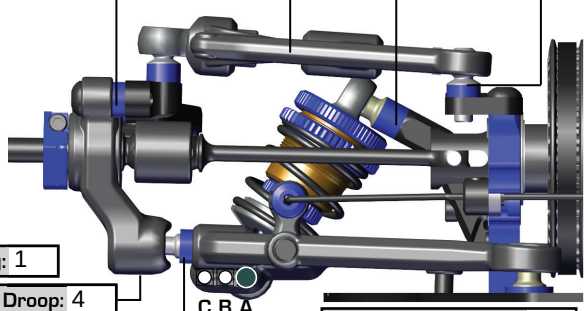

Droop: 4
Track Width Spacing: 2

Rear Suspension:

Ride Height: 5.4
Camber: -2
Toe: 3
Anti-Roll Bar: 1.3
Wheel Hex: 4
Steering Block Type: Kit
Lower Arm Type: Kit
Upper Arm Type: Kit
Diff Height Insert: High ☐ Low ●
Diff Bearing Cam: High ☐ Low ●
Notes:

RF Ball Stud Spacing: 1 | RR Ball Stud Spacing: 1
Steering Arm: Kit | Ball Stud Spacing: 4

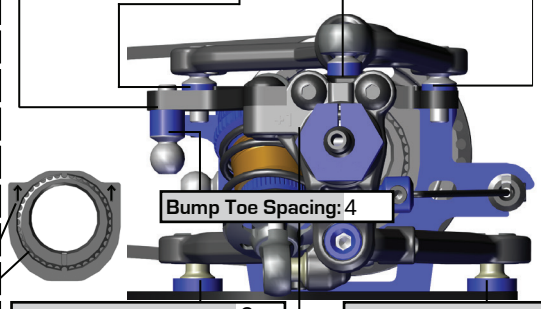

Bump Toe Spacing: 4
RF Roll Center Spacing: 2 | RR Roll Center Spacing: 2
Axle Height: +0 ☐ +1 ● +2 ☐

Upper Arm Position: Long ☐ Short ●
Upper Arm Caster: 0 ● -2 ☐ -4 ☐
KPI Spacing: 0 | Shock Spacing: 2

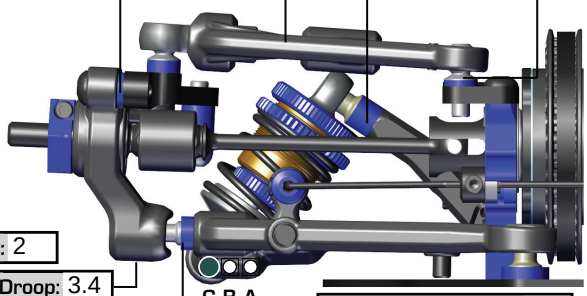

Droop: 3.4
Track Width Spacing: 2

Steering and Electronics:

Ball Stud Spacer: 2

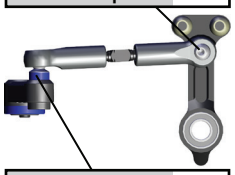

Ball Stud Spacer: 2
Motor / Turn: Reedy
Spur: 92
Pinion: 54
ESC: Reedy

Servo Horn Type
Servo Horn: ☐
Servo Saver: ●
Servo Horn Height: 18.5
Servo: Reedy
Steering Lock (In): 25
Radio: Flysky
Timing:
Battery: Reedy
Note:

Drivetrain:

	Front	Rear
Type:	Spool: ● Diff: ☐	Diff: ☐
Fluid:		10,000
Gear Material:		Plastic
Gear Type:		HTC
Notes:		
Tires:		Body:
Additive:	SXT	Wing:
Body Position:	Fwd: ☐ Mid: ● Back: ☐	
Note:		

Shocks:

	Front	Rear
Piston:	2 x 1.1mm/2 x 1.2mm	2 x 1.1mm/2 x 1.2mm
Fluid:	30 wt	30 wt
Spring:	15.7lb Gray	16.5lb Blue
Stroke:	8	8
Limiters:	Int: 0 Ext: 0	Int: 0 Ext: 0
PSD Sleeve:	No	No
Shock Mount:	Fixed: ● Active: ☐	Fixed: ● Active: ☐

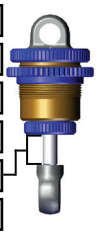

Notes:

Track Info:

Size: Tight | Surface: Indoor carpet | Traction: Medium
Temp: 21C/70F | Notes: Setup: My Base Setup

Top Deck Flex:

Split: ● One-Piece: ☐ | Carbon Fiber: ● G10: ☐



Front Top Deck Type:
Rear Top Deck Type:
Notes:

Weight Bias and Chassis Flex:

Total Weight: 1330
Front Bias: 50 / 50
Rear Bias:

FT Steel Short Battery Weights: ☐
FT Steel Battery Weights: ☐
FT Steel Rear Weight: ☐
Floating: Yes: ☐ No: ☐

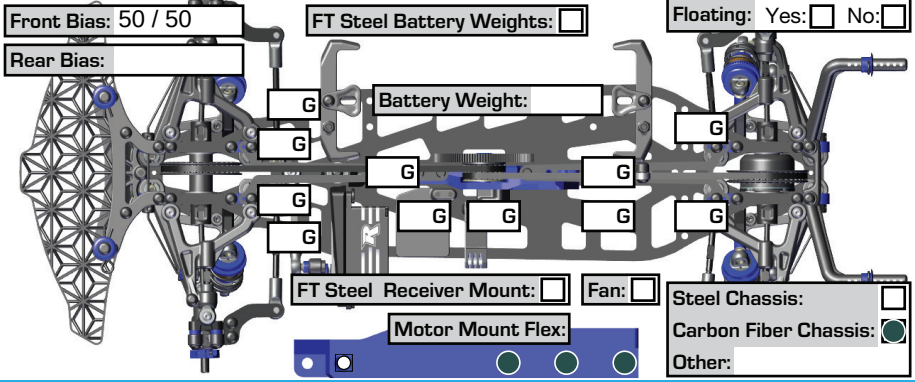
G
G
G